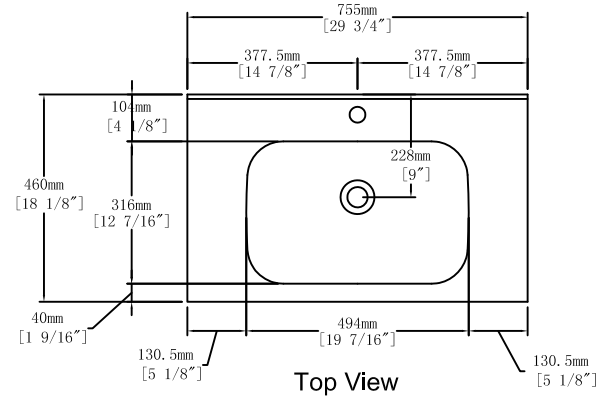

Top View

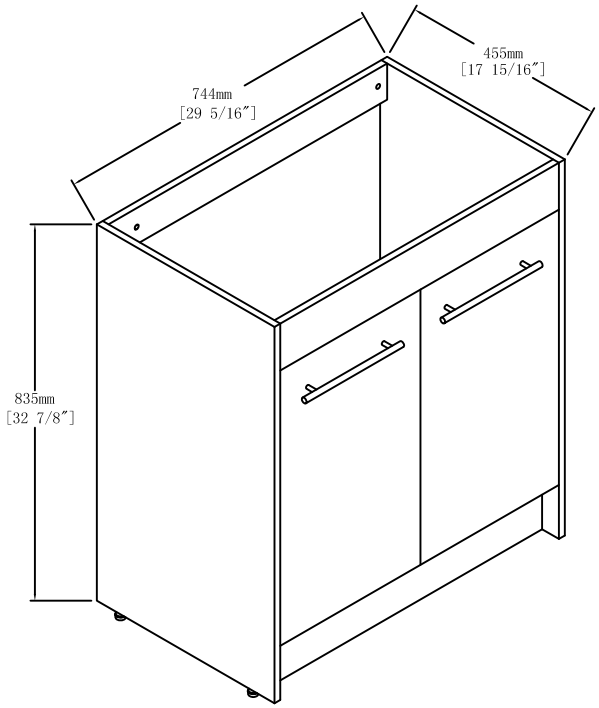

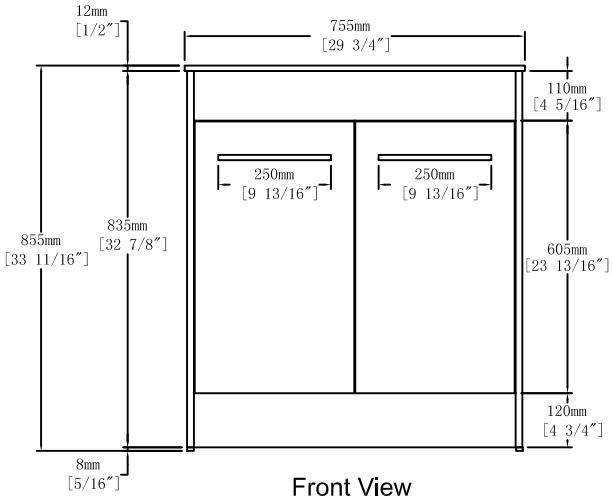

Front View

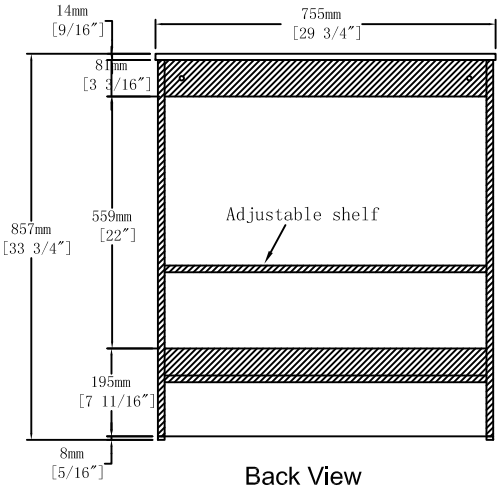

Back View

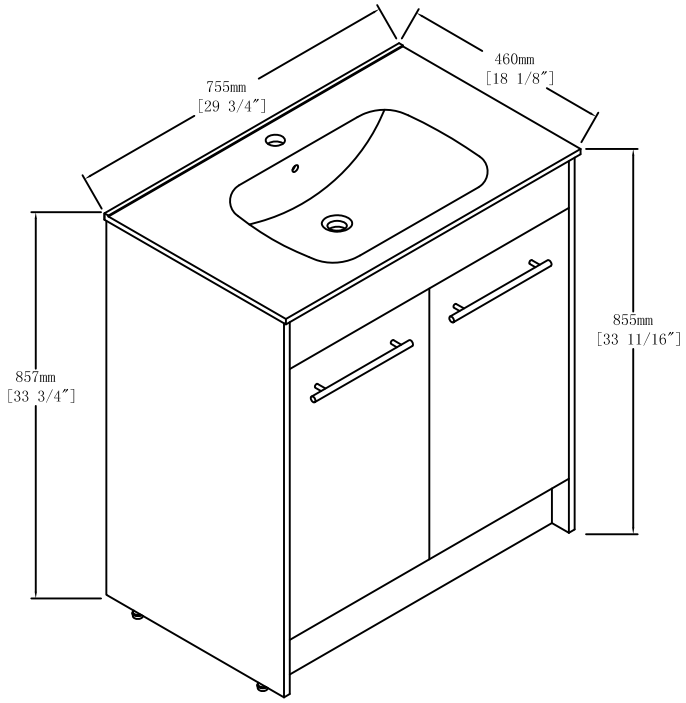

青柠供应链 G-Lemon Supply Chain	Item NO.	BV C04830	Version	V1
	Projece		Date	2022-12-19