ASSEMBLY INSTRUCTION

1.

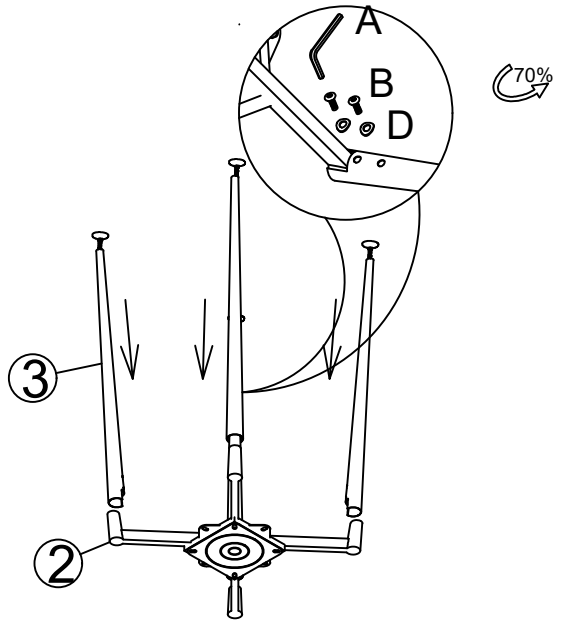

2.

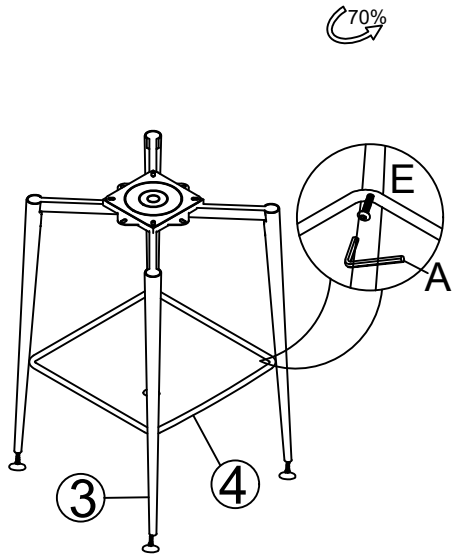

4.

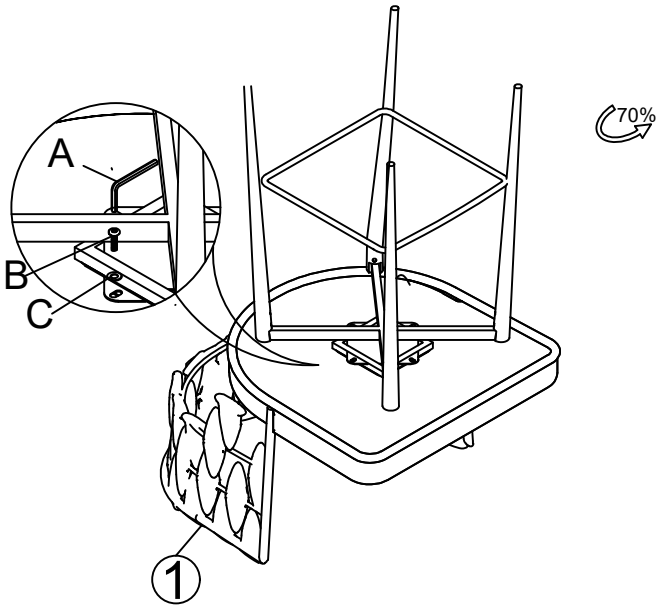

4.

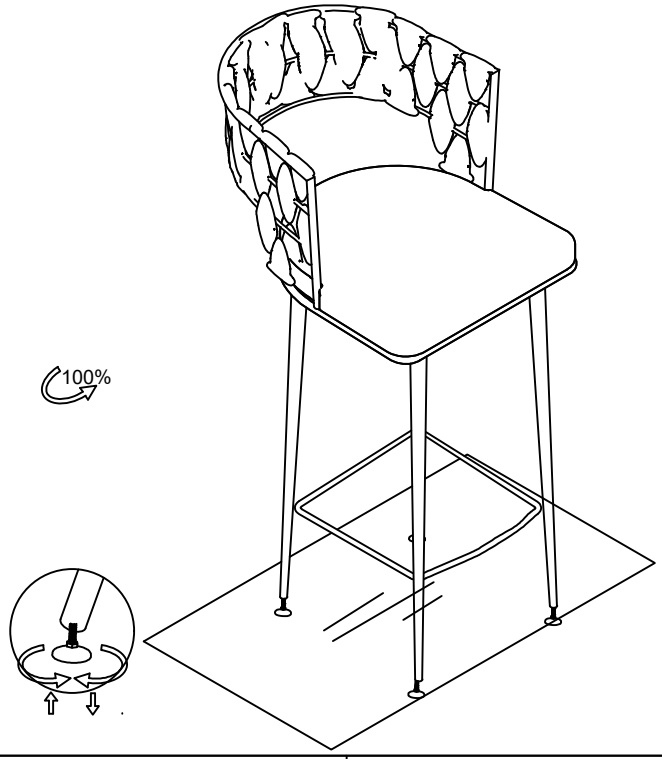

① 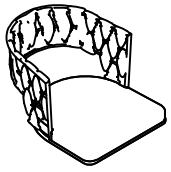 X1	② 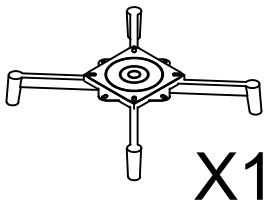 X1	③ 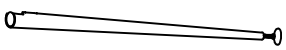 X4	④ 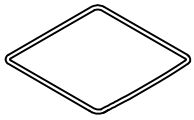 X1

A 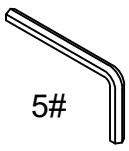 5# X1	B 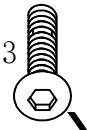 M6X13 X12	C M6 X4	D M6 X8	E X4