JT-3212

PORTABLE BASKETBALL HOOP MANUAL

GET TO KNOW THE BASIC PARTS

BACKBOARD

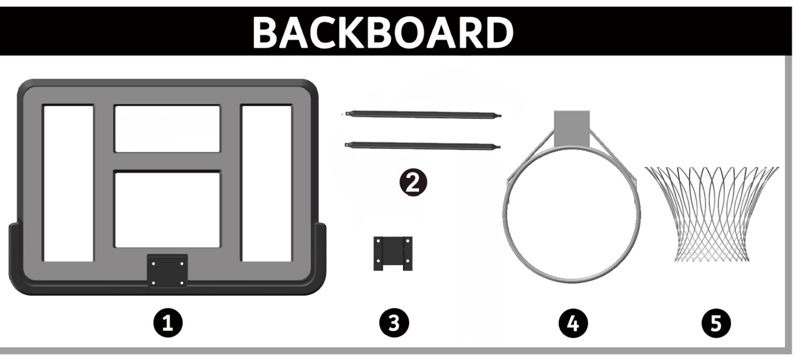

BASE

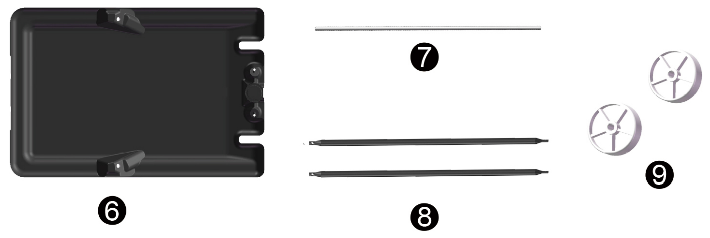

SUPPORT POLE

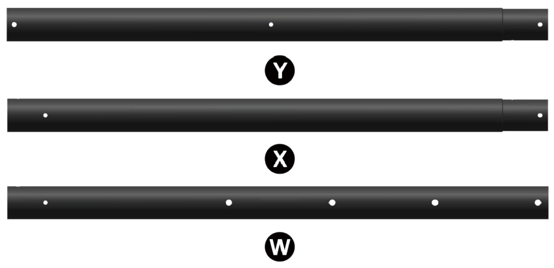

GET TO KNOW THE BASIC PARTS

SPARE PARTS

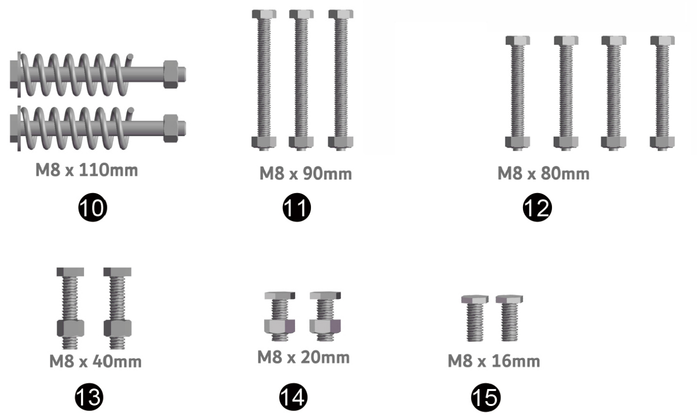

TOOLS NEEDED

Please prepare the following tools before assembly:

Note: All screws are designed to prevent loosening and must be installed and tightened with a wrench.

INSTALLATION STEPS

BASE

Needed Parts

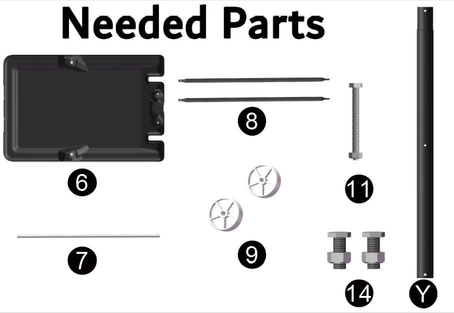

1.1

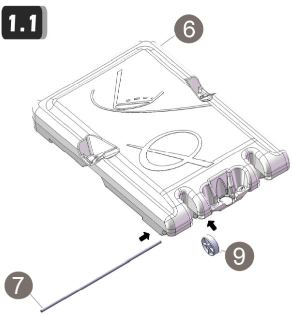

1.2

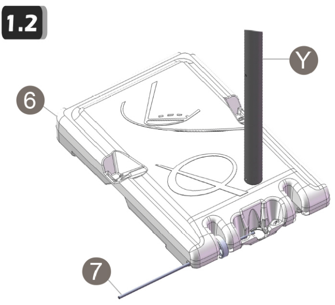

1.3

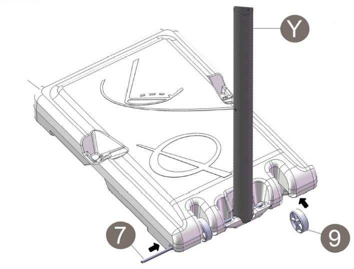

1.4

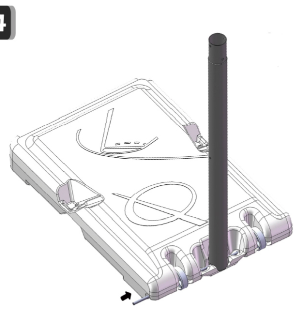

1.5

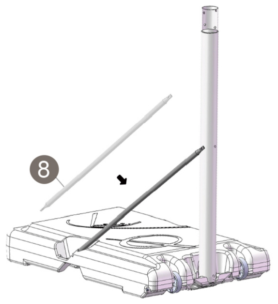

INSTALLATION STEPS

BASE

1.6

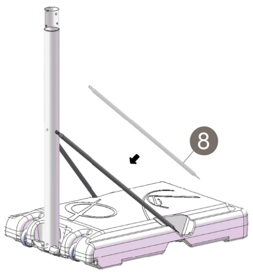

1.7

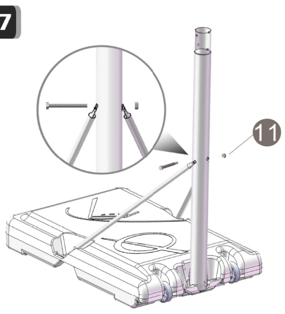

1.8

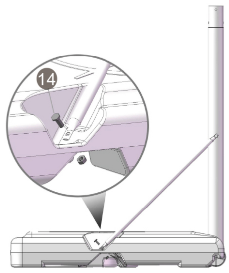

1.9

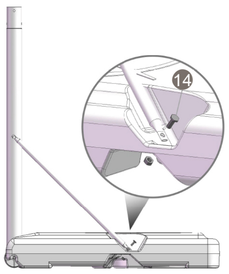

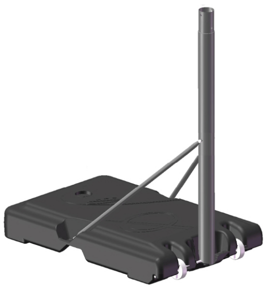

INSTALLATION STEPS

BACKBOARD

Needed Parts

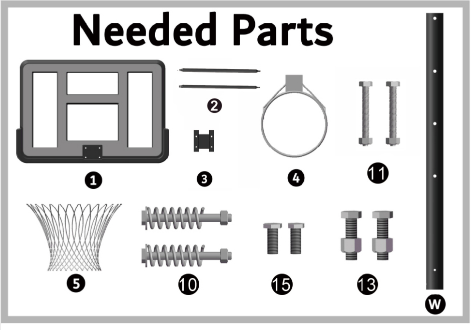

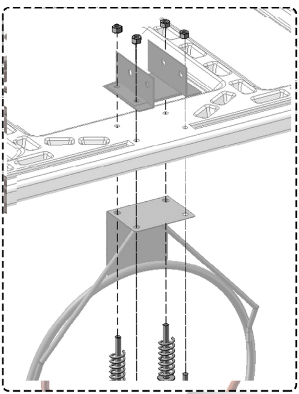

2.1

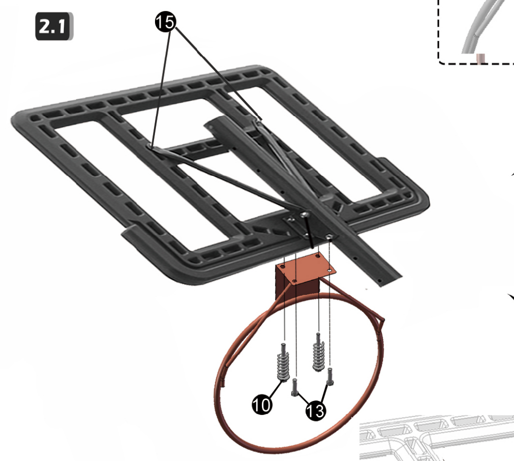

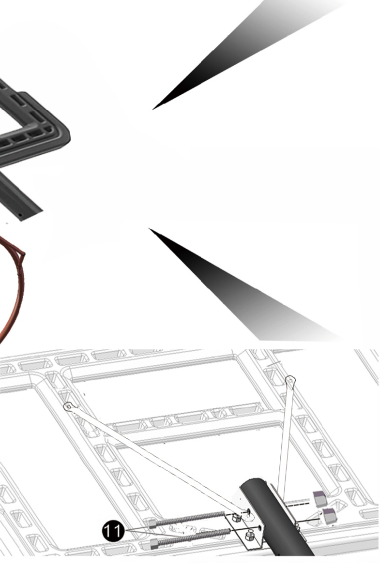

INSTALLATION STEPS

BACKBOARD

2.3

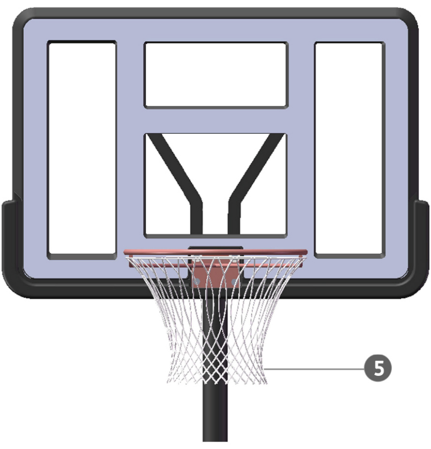

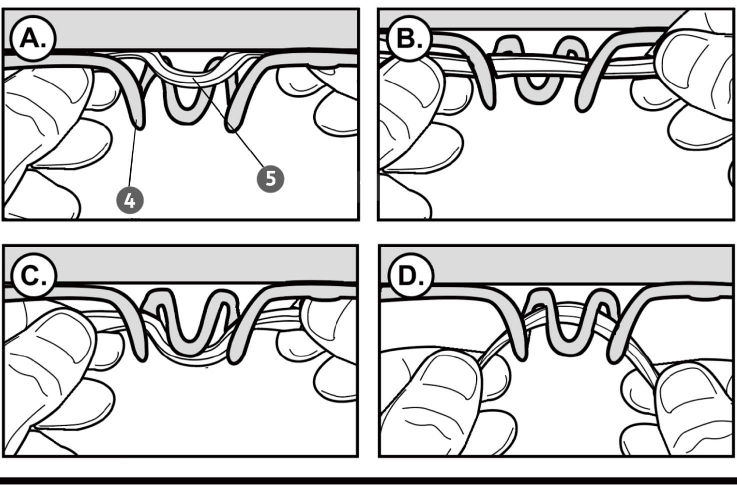

INSTALLATION STEPS

FINAL INSTALLATION

Replace the (11) screw on the backboard and fix it at the position of the upper rod (W) to adjust the height

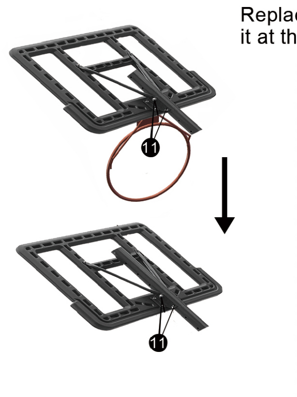

3.2 8-10FT

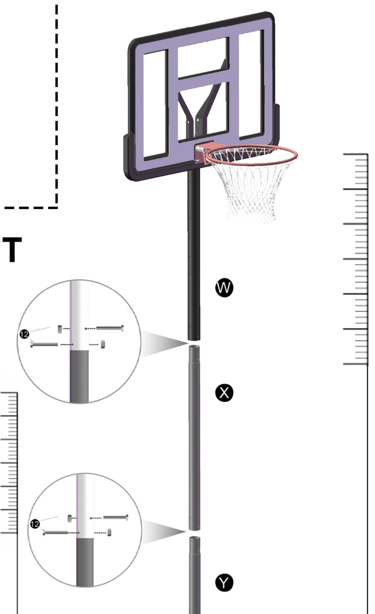

FT	CM
4FT 9	145CM
5FT 1	155CM
5FT 5″	165CM
5FT 9″	175CM
6FT 1″	185CM
6FT 5″	195CM
6FT 9″	205CM
8FT	245CM
8FT 4″	255CM
8FT 8″	265CM
9FT	275CM
9FT 4″	285CM
9FT 8″	295CM
10FT	305CM

3.1 4.8-6.8FT

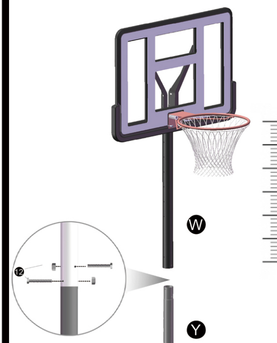

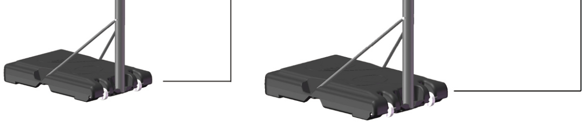

COOL INDUCTIVE LED FOR BASEKETBALL RING

1. Brief Introduction:
This led product is the auxiliary device of basketball frame. It presents different cool lighting effects according to different scoring methods, adding more interesting and fun sports atmosphere for pitchers.

2. Product function:
Normal state: In the non-inductive state, there are two states: low brightness white light and no light, controlled by plug-in power supply.
Plug in the power supply, and the light is always in ice blue color. If the light is off after 3S, it will be off when it is not normally sensed;
Plug in the power supply, and the light is always bright ice blue. If the light is low bright white after 3S, it will be low bright white when it is not normally sensed.
Box goal: basketball vibration ball frame into the net, 12 cool lighting effects in turn, each mode lights last 3S;
Through the heart goal: always in ice blue color for 3S.
Note: the effective induction time of two goals should not be less than 2S.

3. Product Parameter:
Work voltage: DC4.5V（3PCS AA dry batteries)
Work current: The maximum current is 500mA when the induction lamp is on for 3S.

4. Product installment:
Product general assembly diagram.

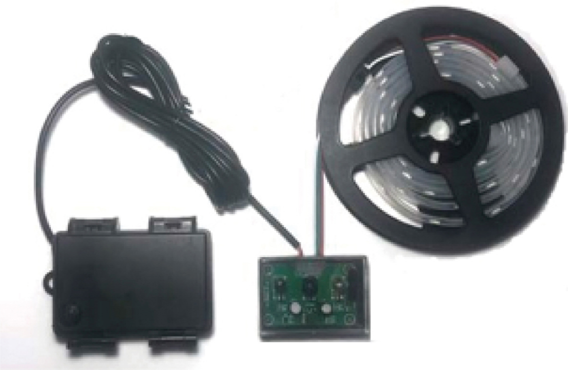

1.surround the LED light belt around the basketball metal frame with the light bead facing out, Try to keep the light strip on the lower edge of the basketball hoop to reduce the probability of basketball impact ， then lock it with the tie belt at a proper position, and cut off the redundant tie belt.

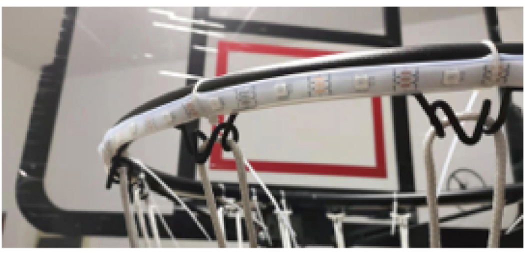

2.Two side 3M adhesive tape with one side pasted with induction control box.

9448A
3M
9448A
Double Coated Tissue Tape

3.Place the other side flat on the bottom of the basketball hoop and the backboard, in the middle of the position, and try to keep the sensor and the hoop as far away as possible to prevent misjudgment caused by brushing the frame.

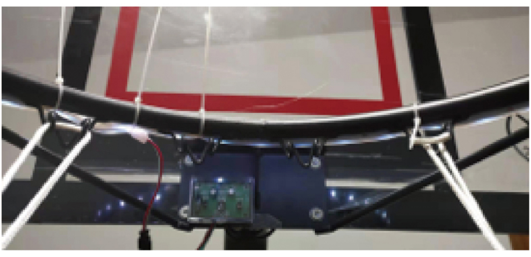

4.Install 3 AA batteries into the battery box, and stick the back of the battery box with strong 3M tape

3M
9448A
9448A

5.Stick the battery box to the basketball frame post with 3M tape.

6.Press the switch, the LED can work normally.

Tips: If you do not use this product, please turn off the battery box switch to prevent self-power consumption.