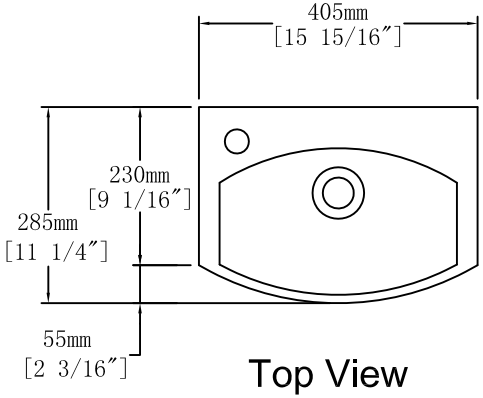

Top View

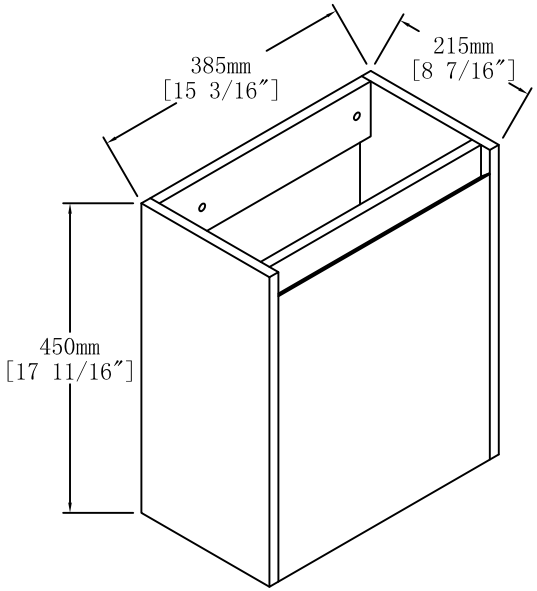

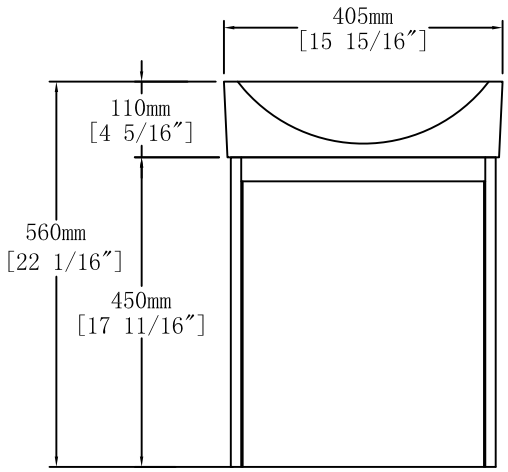

Front View

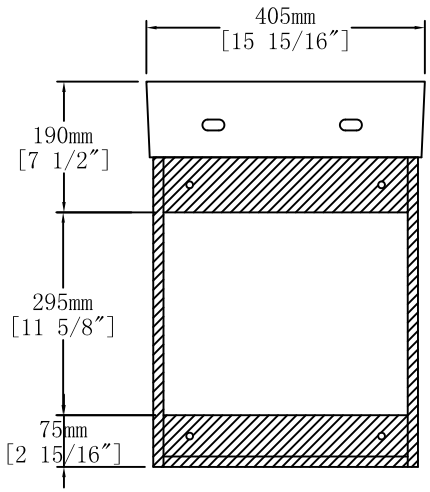

Back View

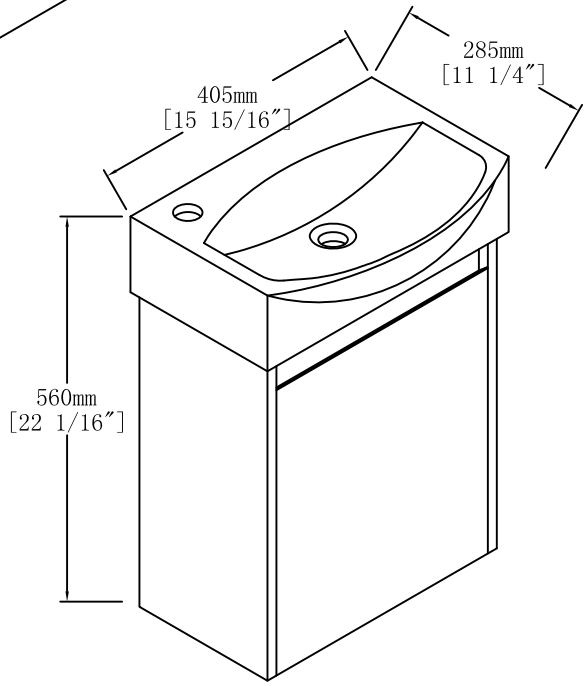

LEVISTAR	Item NO.	LV C816	Version	V1
	Project		Date	2024-4-23