H23059 ZB JMY

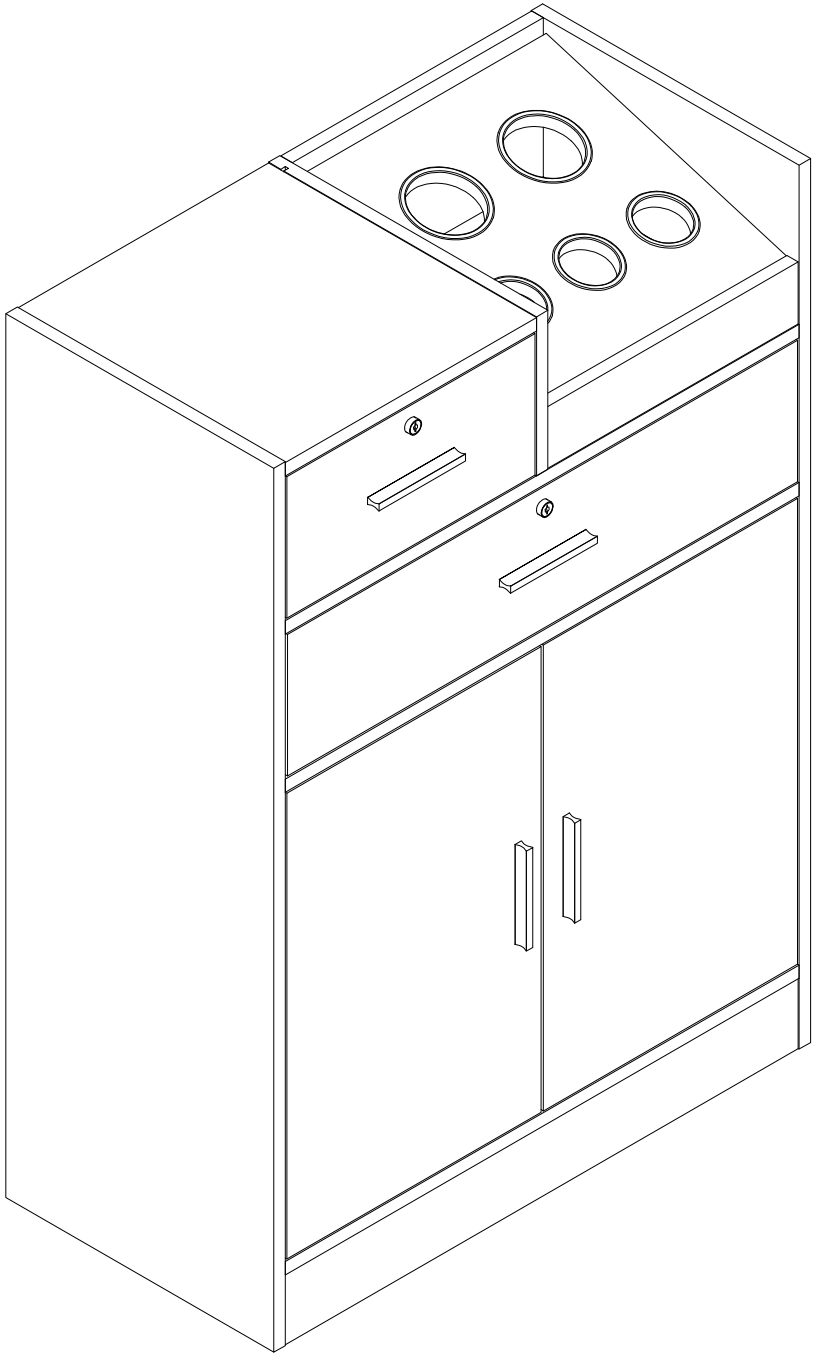

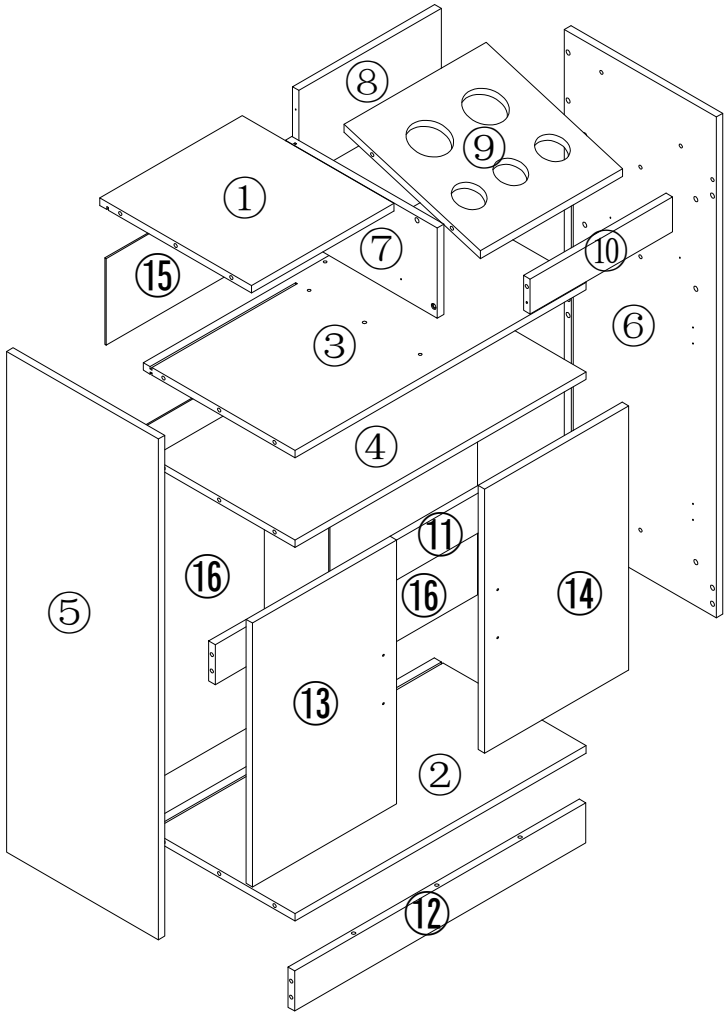

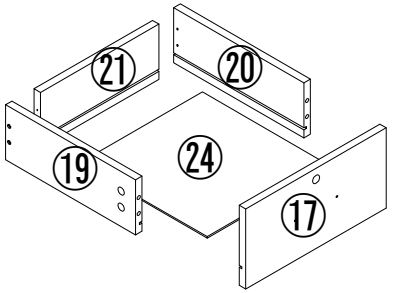

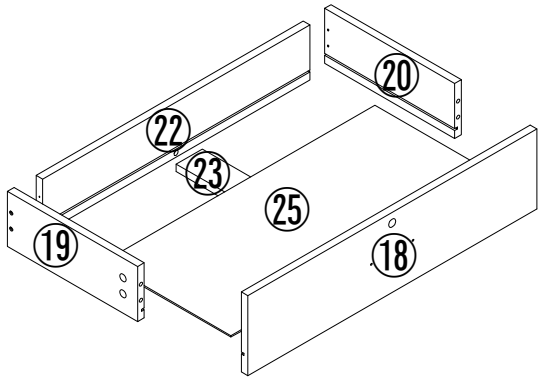

K 3.5*14 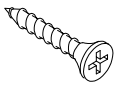 44PCS	L 3.5*16 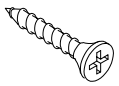 8PCS	M 3.5*35 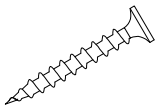 8PCS	N 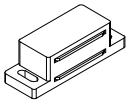 2PCS	O 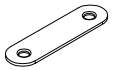 2PCS	P 96MM 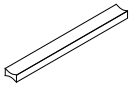 4PCS	Q 4*18 8PCS	R 20PCS	S 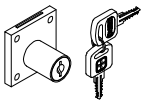 2PCS	T ϕ80 2PCS
A 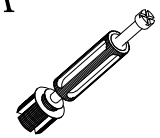 39PCS	B 39PCS	C 8*40 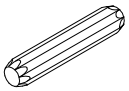 16PCS	D 7*50 7PCS	E 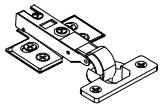 4PCS	F 300MM 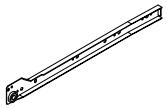 2PCS	G 300MM 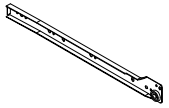 2PCS	H 300MM 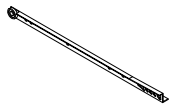 2PCS	I 300MM 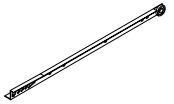 2PCS	J 3*12 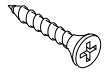 24PCS

U ϕ60 3PCS	V 707MM 1PCS

1

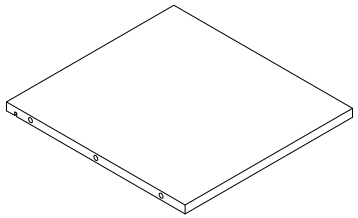

328*350 1 PCS

2

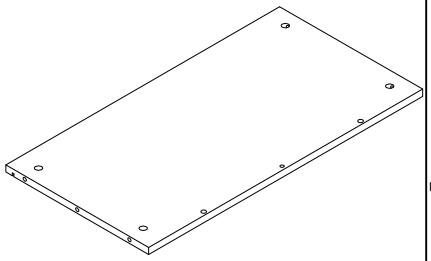

671*350 1 PCS

3

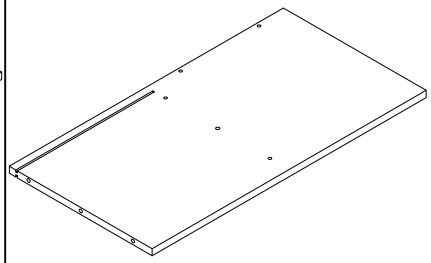

671*350 1 PCS

4

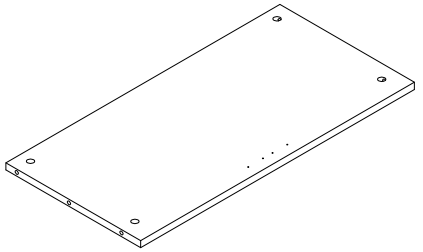

671*330 1 PCS

5

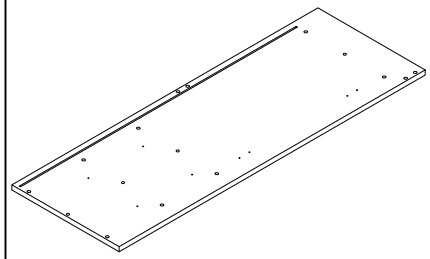

1000*350 1 PCS

6

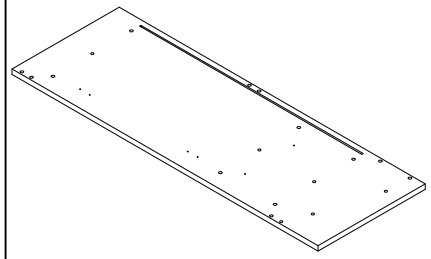

1000*350 1 PCS

7

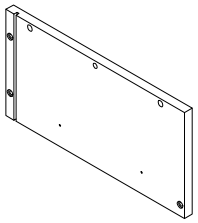

180*350 1 PCS

8

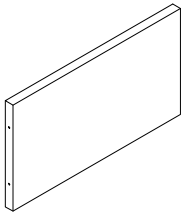

328*180 1 PCS

9

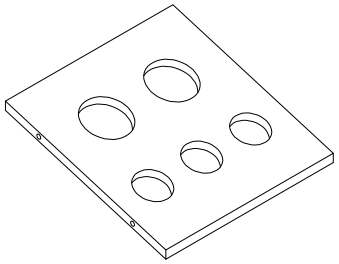

328*333 1 PCS

10

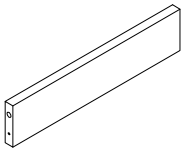

328*70 1 PCS

11

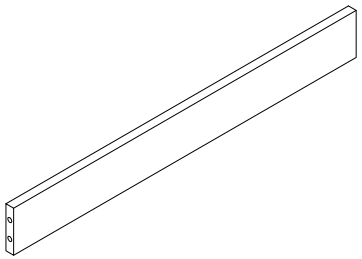

671*80 1 PCS

12

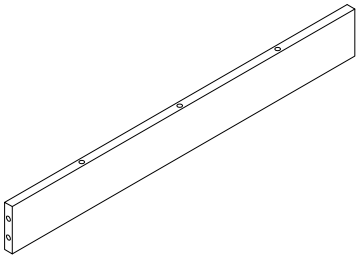

671*80 1 PCS

13

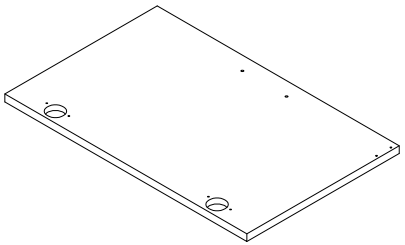

527*332 1 PCS

14

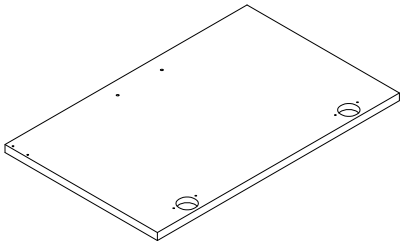

527*332 1 PCS

15

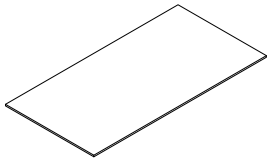

173*338 1 PCS

16

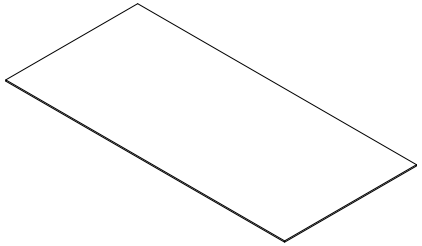

719*340 2 PCS

17

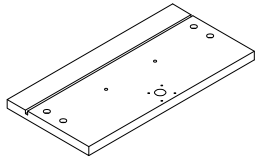

324*160 1 PCS

18

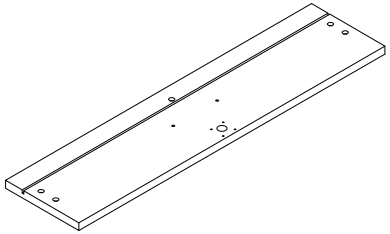

666*160 1 PCS

19

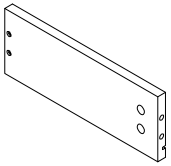

300*110 2 PCS

20

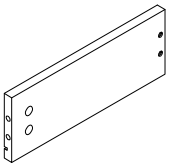

300*110 2 PCS

21

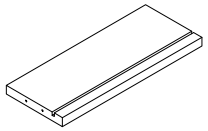

273*110 1 PCS

22

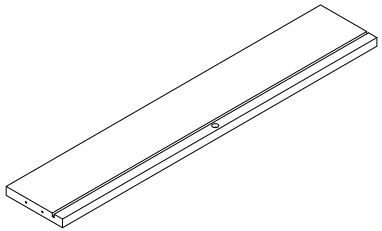

616*110 1 PCS

23

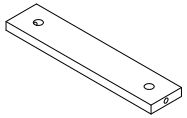

284*60 1 PCS

24

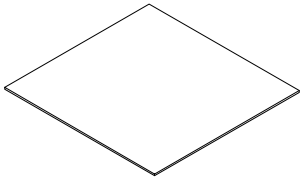

283*294 1 PCS

25

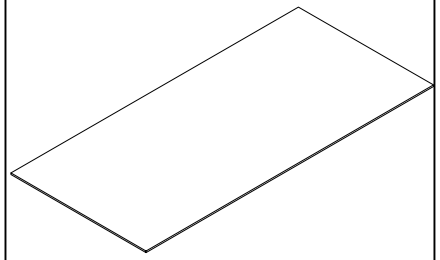

626*294 1 PCS

Hardware installation demonstration

NOTE:Please make sure "A"hardware tightened and can't be pulled out!

I

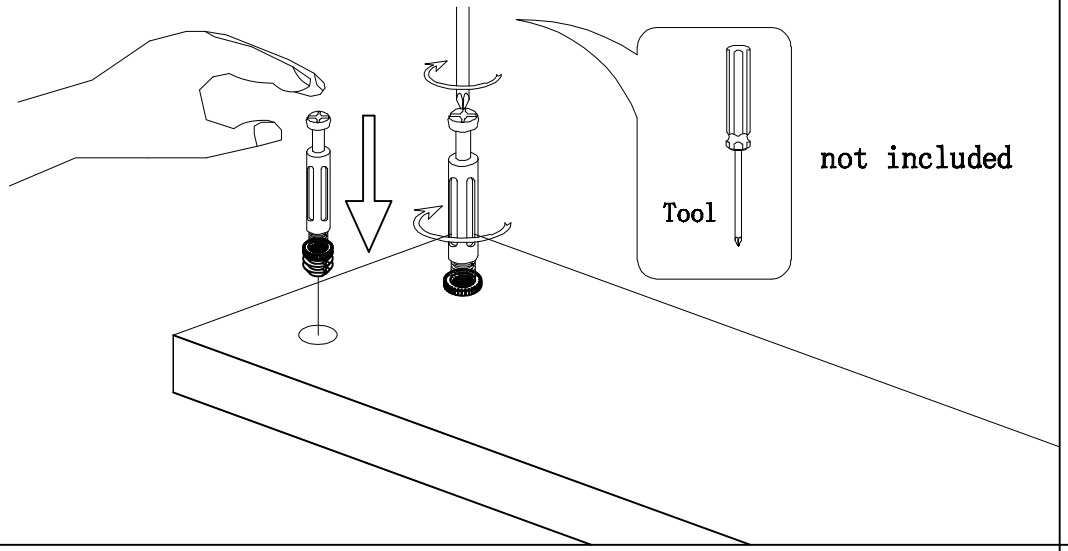

II

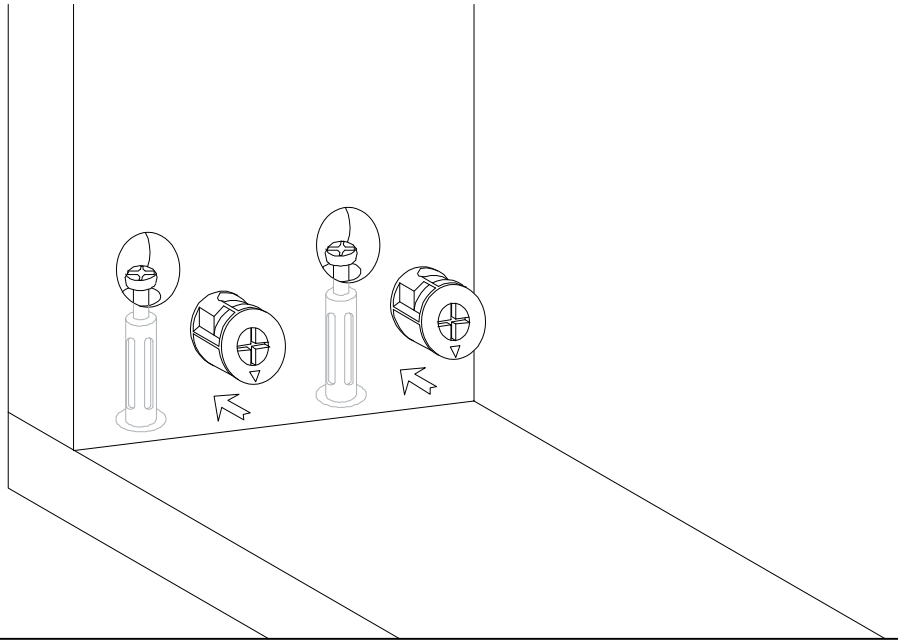

III

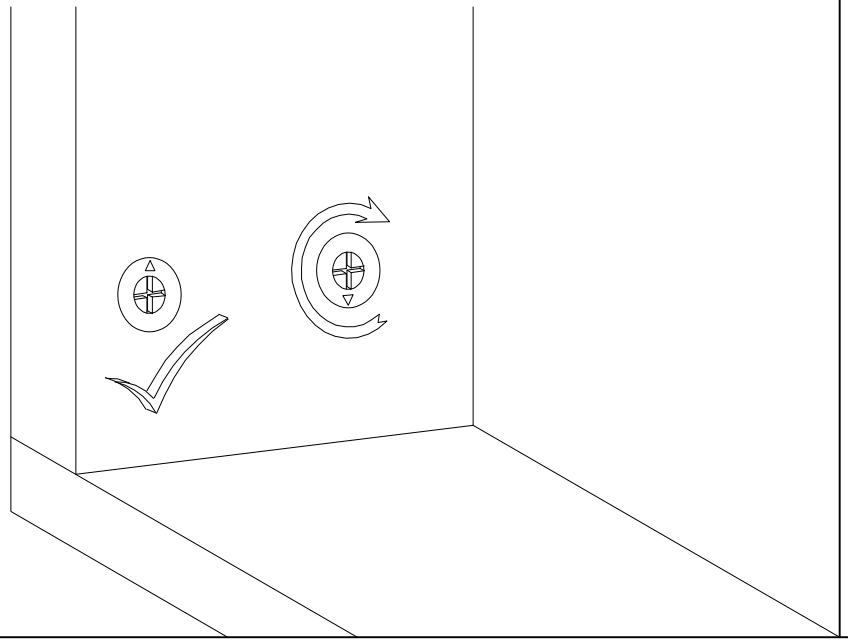

IV

Scan QR code for assembly video

①

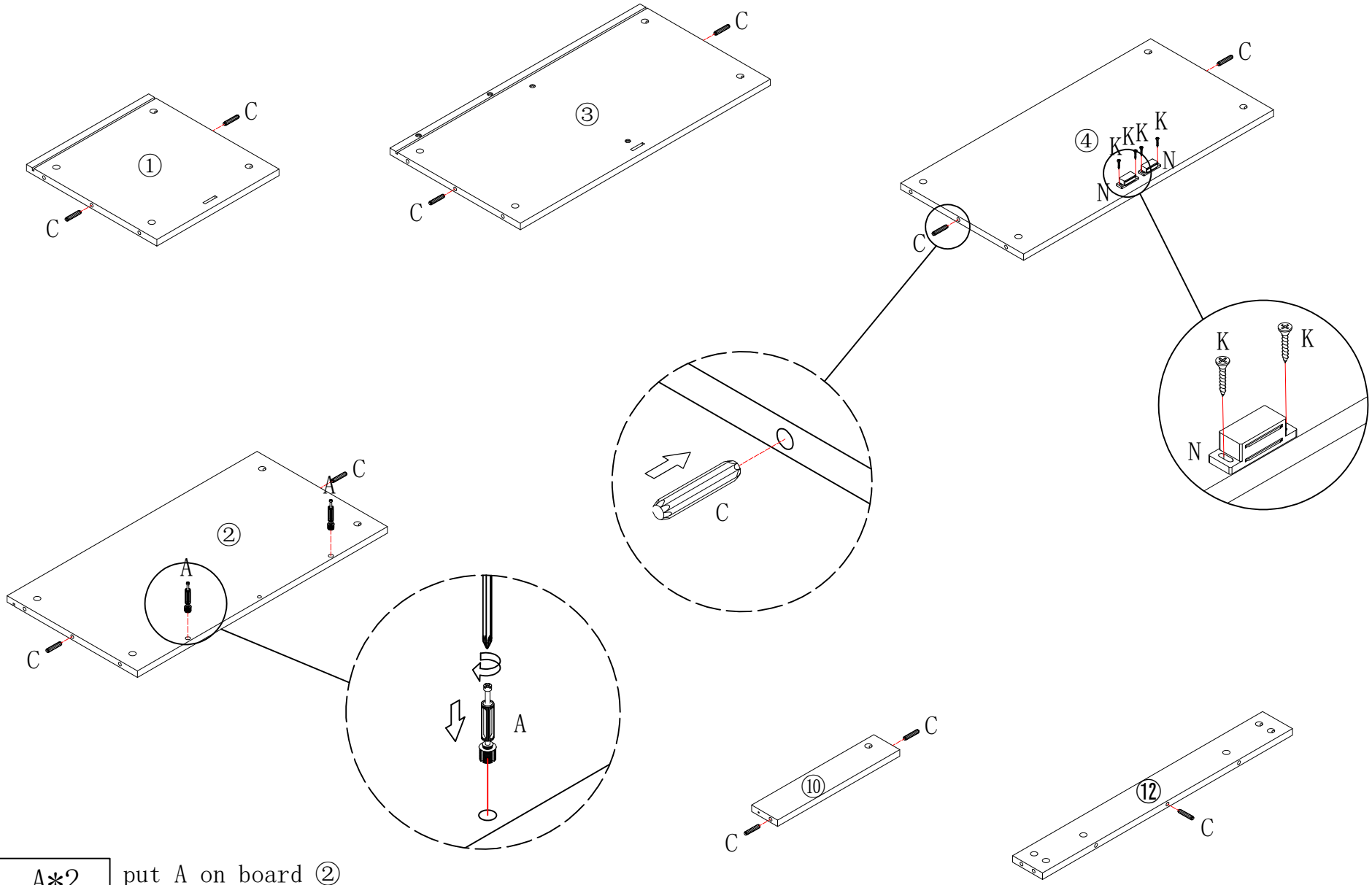

A*2	put A on board ②
C*11	put C on board ①②③④⑩⑫
K*4	
N*2	

②

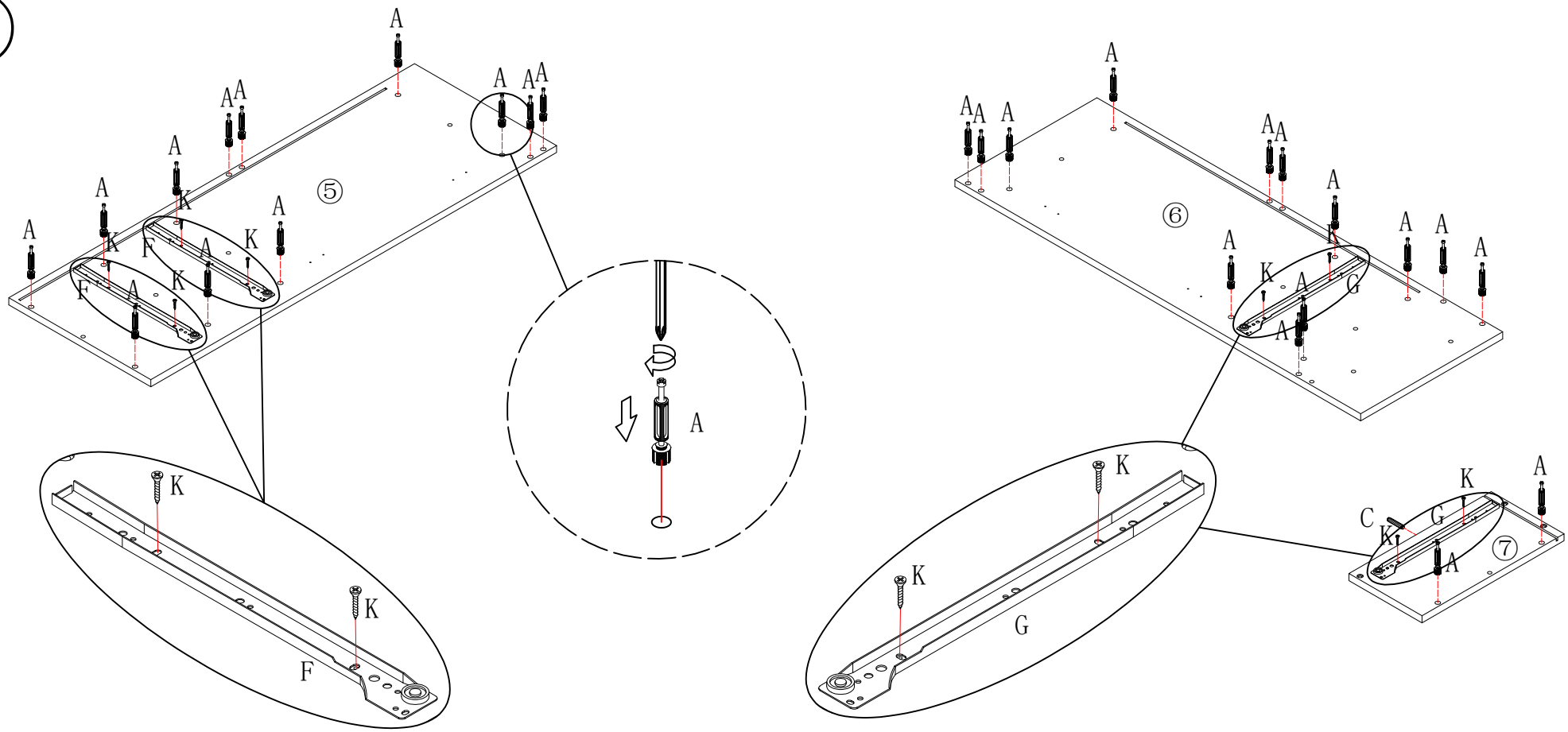

	A*27
	C*5
	F*2
	G*2
	K*8
	T*2
	U*3

put A on board ⑤⑥⑦

put C on board ⑦⑨

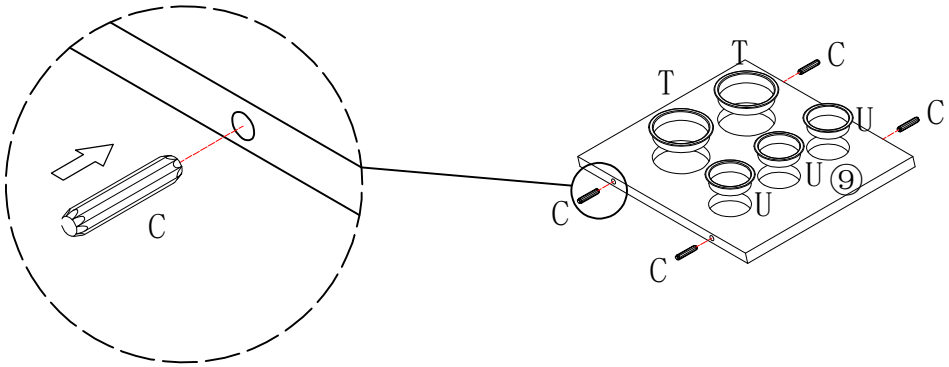

③

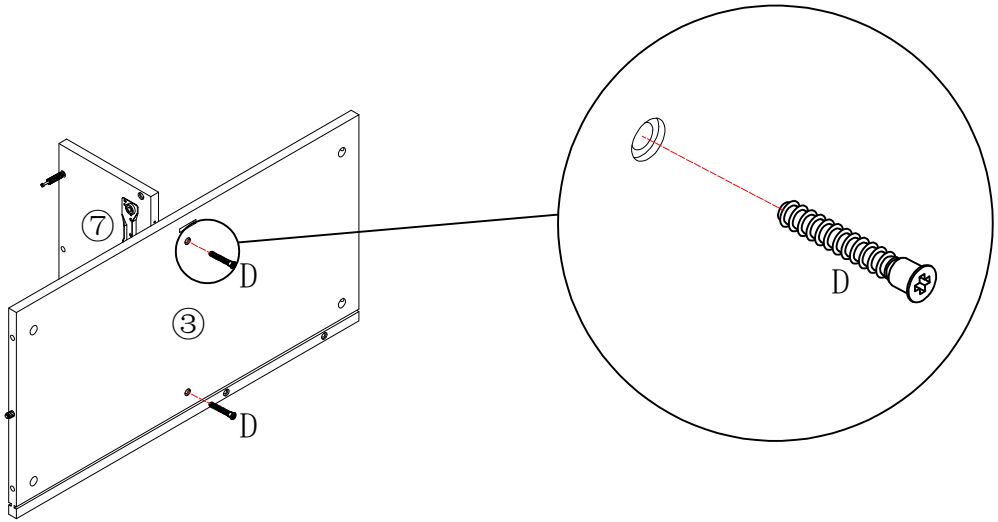

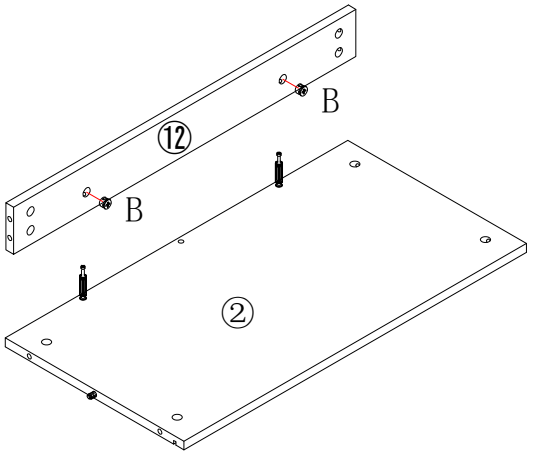

Make sure the arrow on the screw
align to the hole on the side.

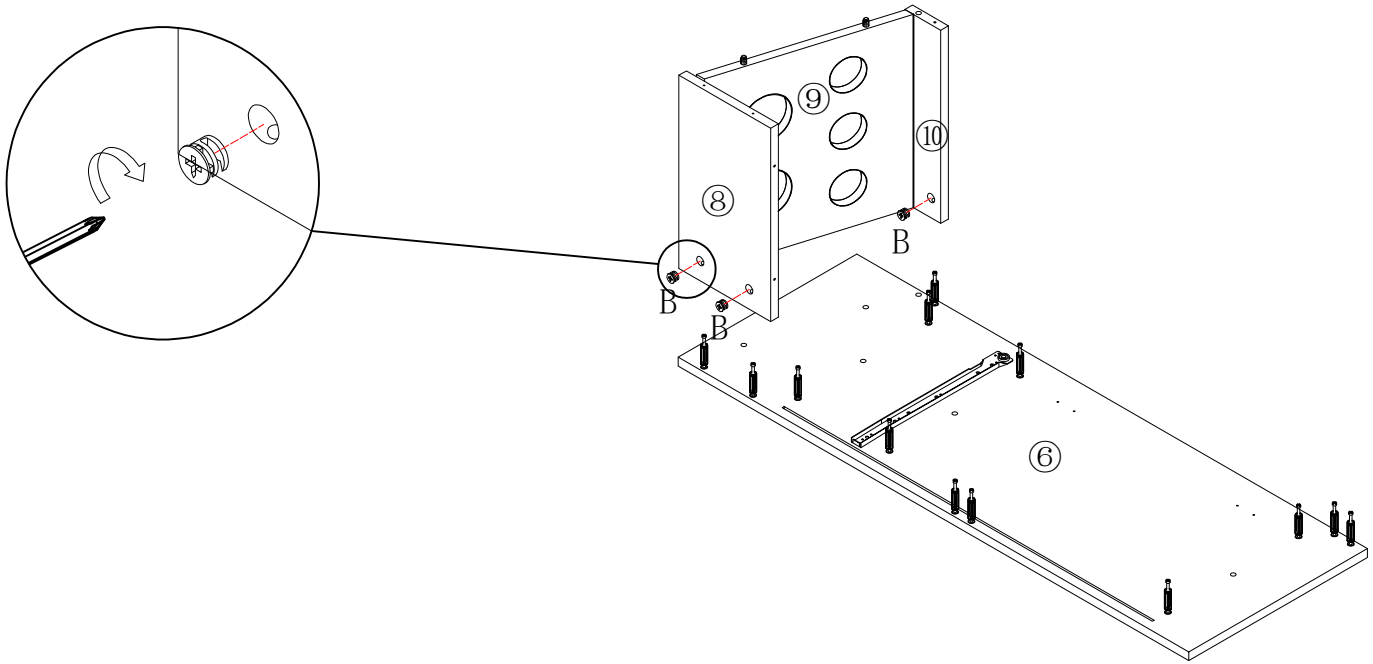

	B*5
	D*2

put B on board ⑧⑩⑫

④

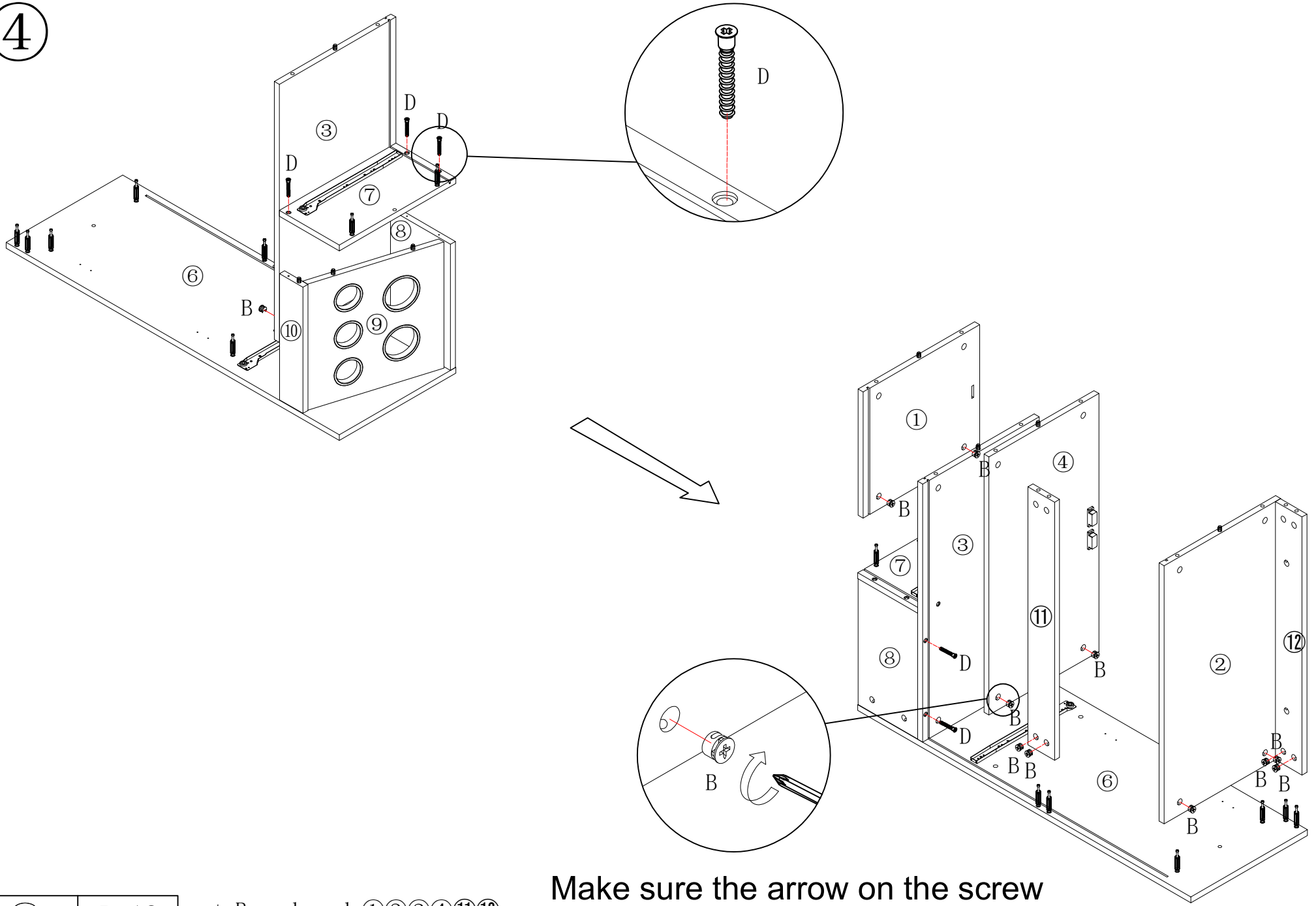

	B*12
	D*5

put B on board ①②③④⑪⑫

Make sure the arrow on the screw align to the hole on the side.

⑤

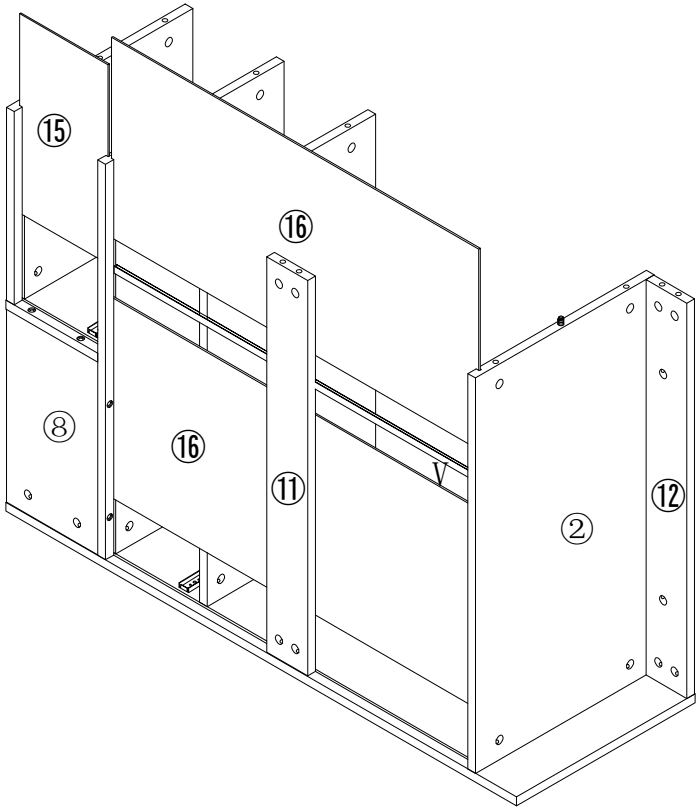

Make sure the arrow on the screw align to the hole on the side.

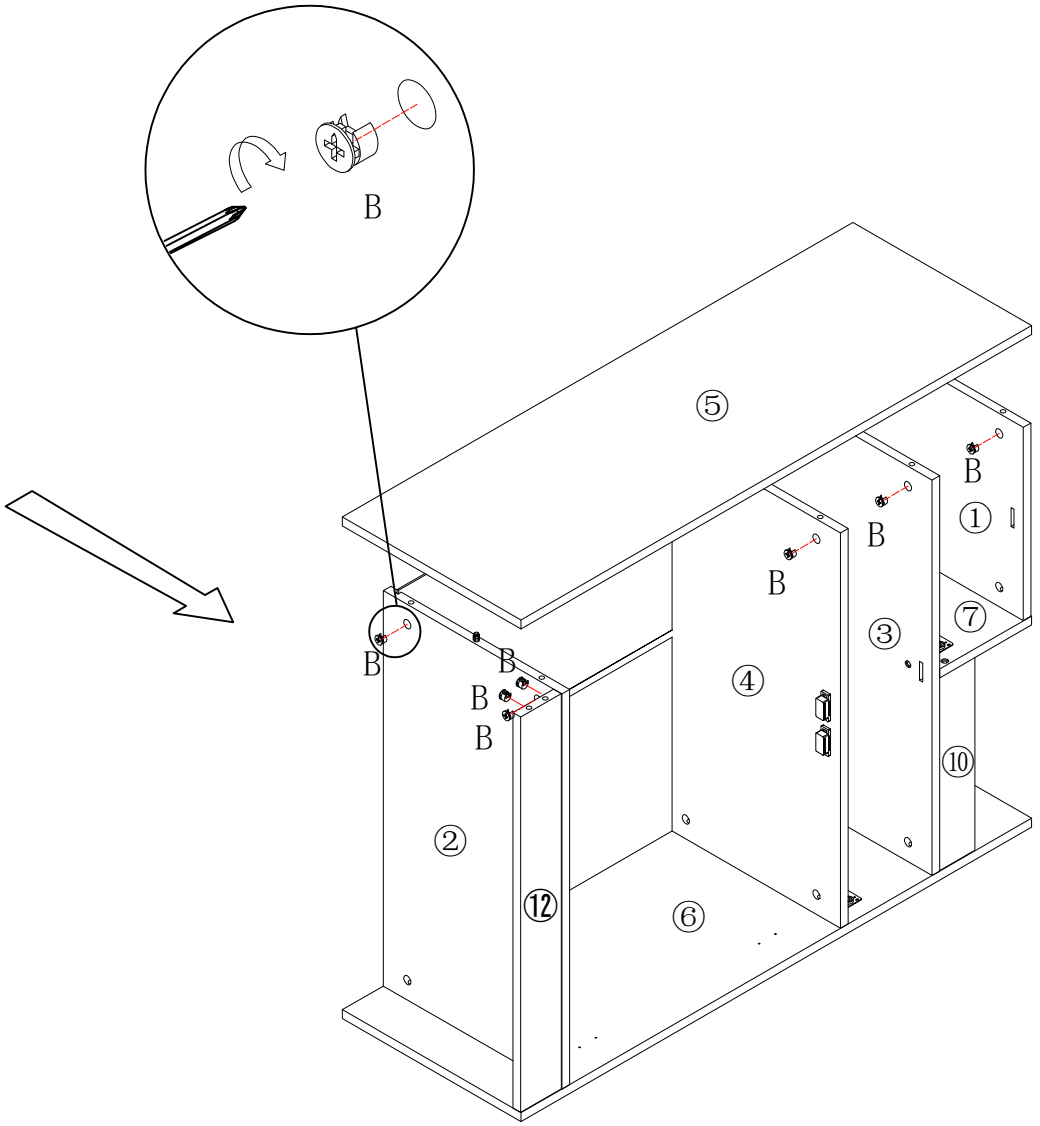

	B*12
	V*1

put B on board ①②③④⑪⑫

6

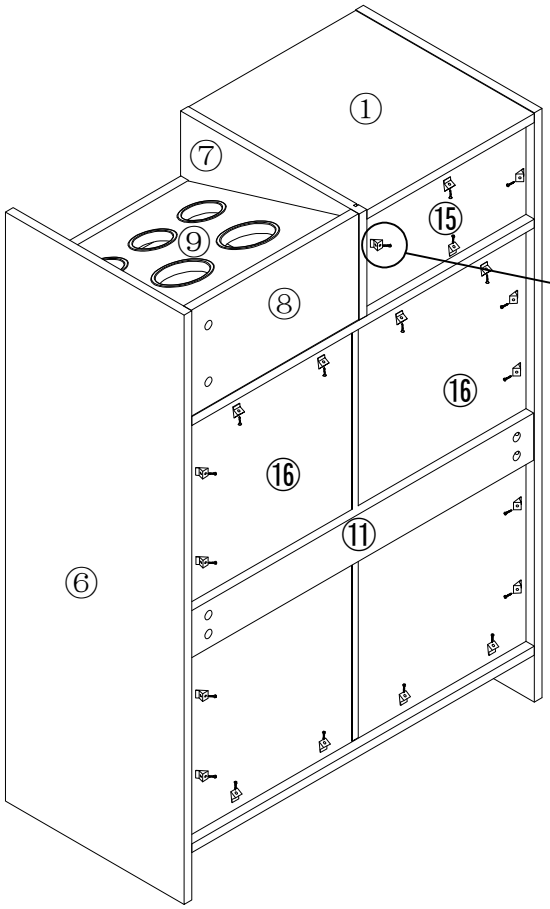

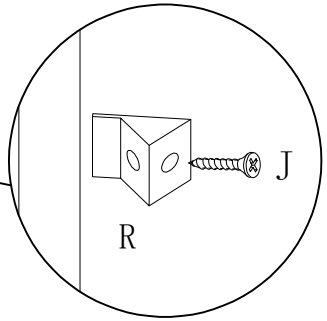

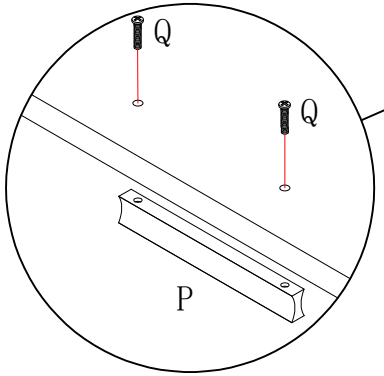

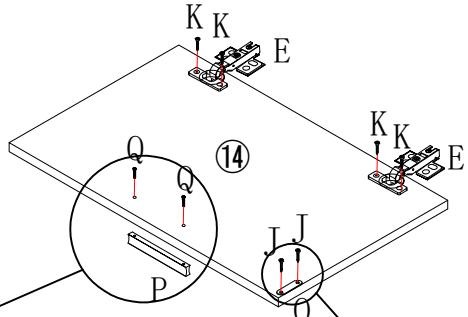

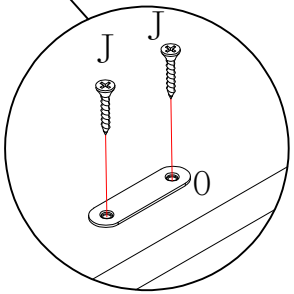

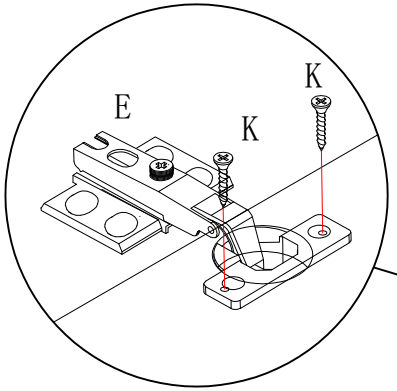

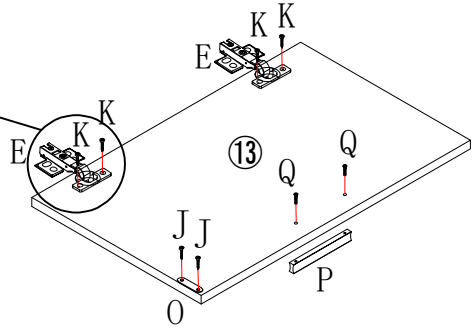

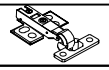	E*4
	J*24
	K*8
	0*2
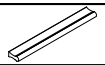	P*2
	Q*4
	R*20

7

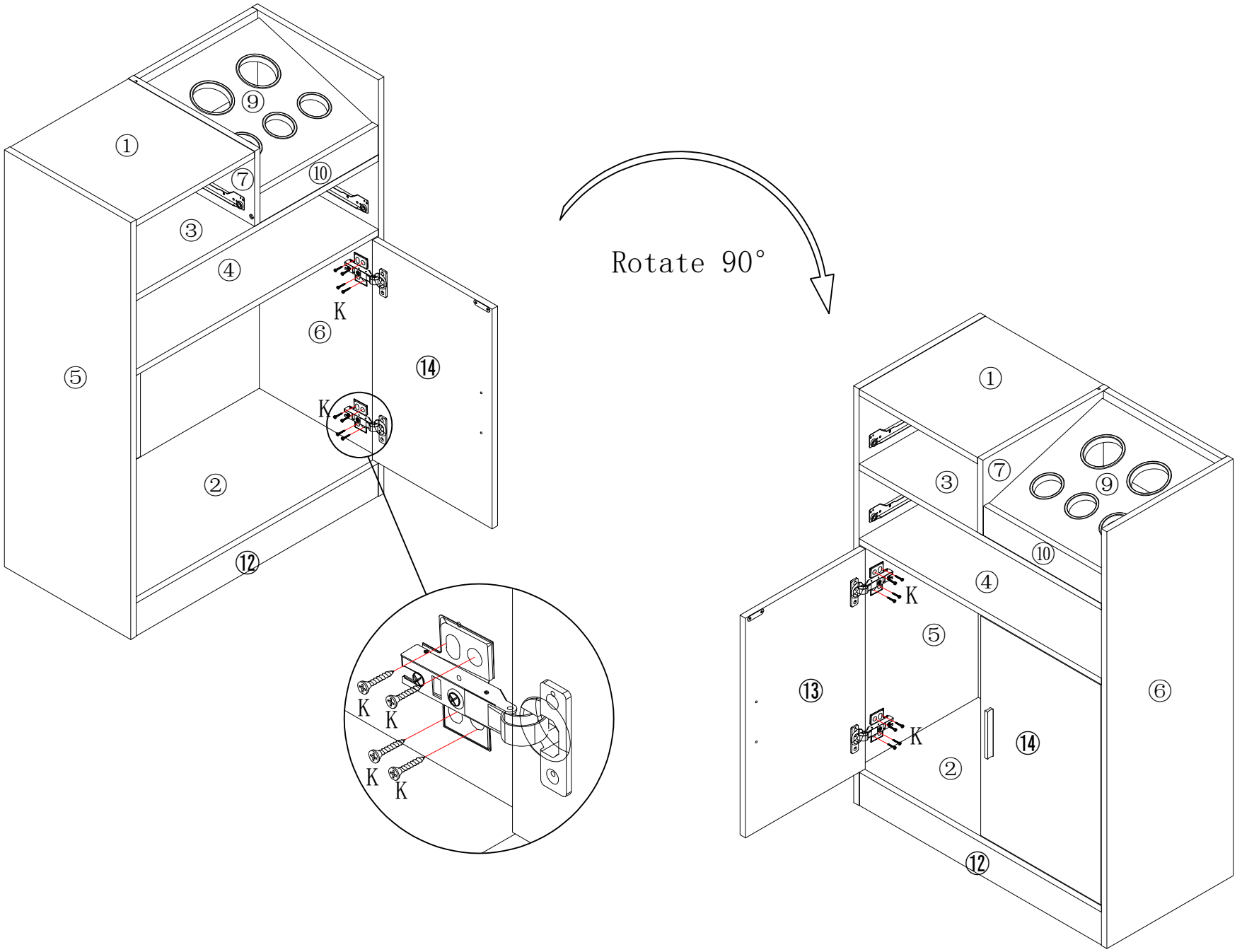

	K*16

8

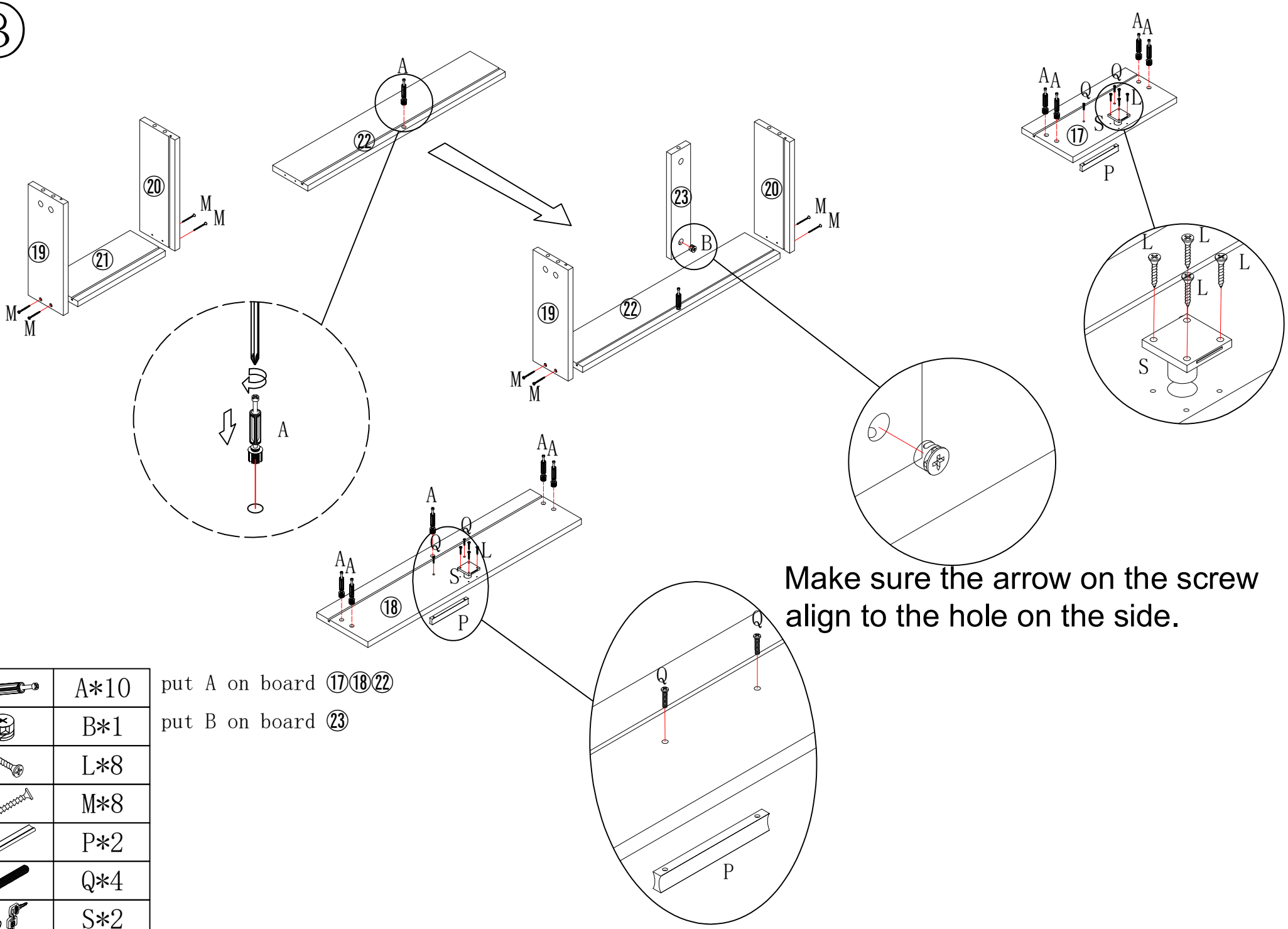

Make sure the arrow on the screw align to the hole on the side.

A*10	put A on board ⑰⑱㉒
B*1	put B on board ㉓
L*8	
M*8	
P*2	
Q*4	
S*2	

⑨

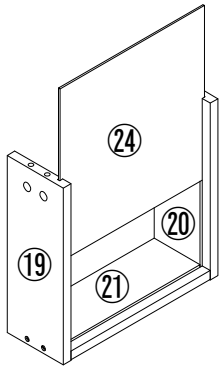

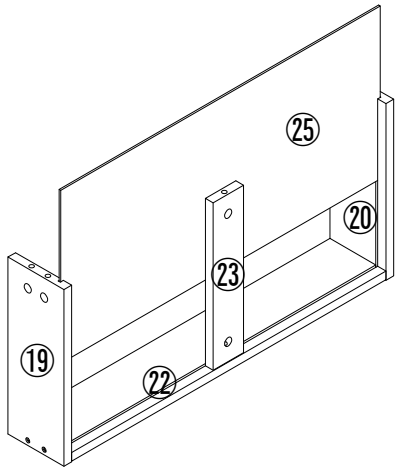

Make sure the arrow on the screw
align to the hole on the side.

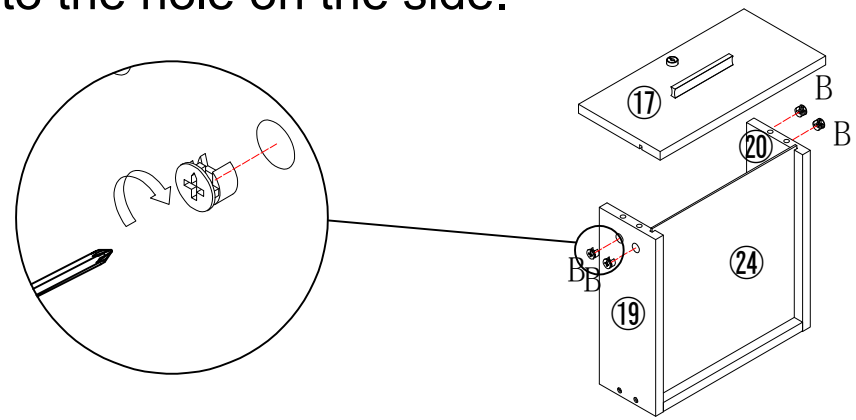

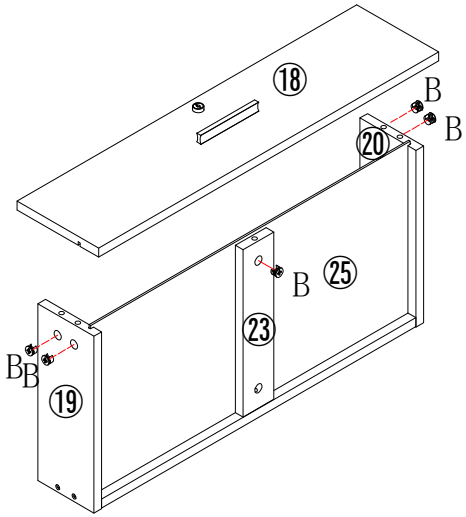

	B*9	put B on board ⑮⑯

10

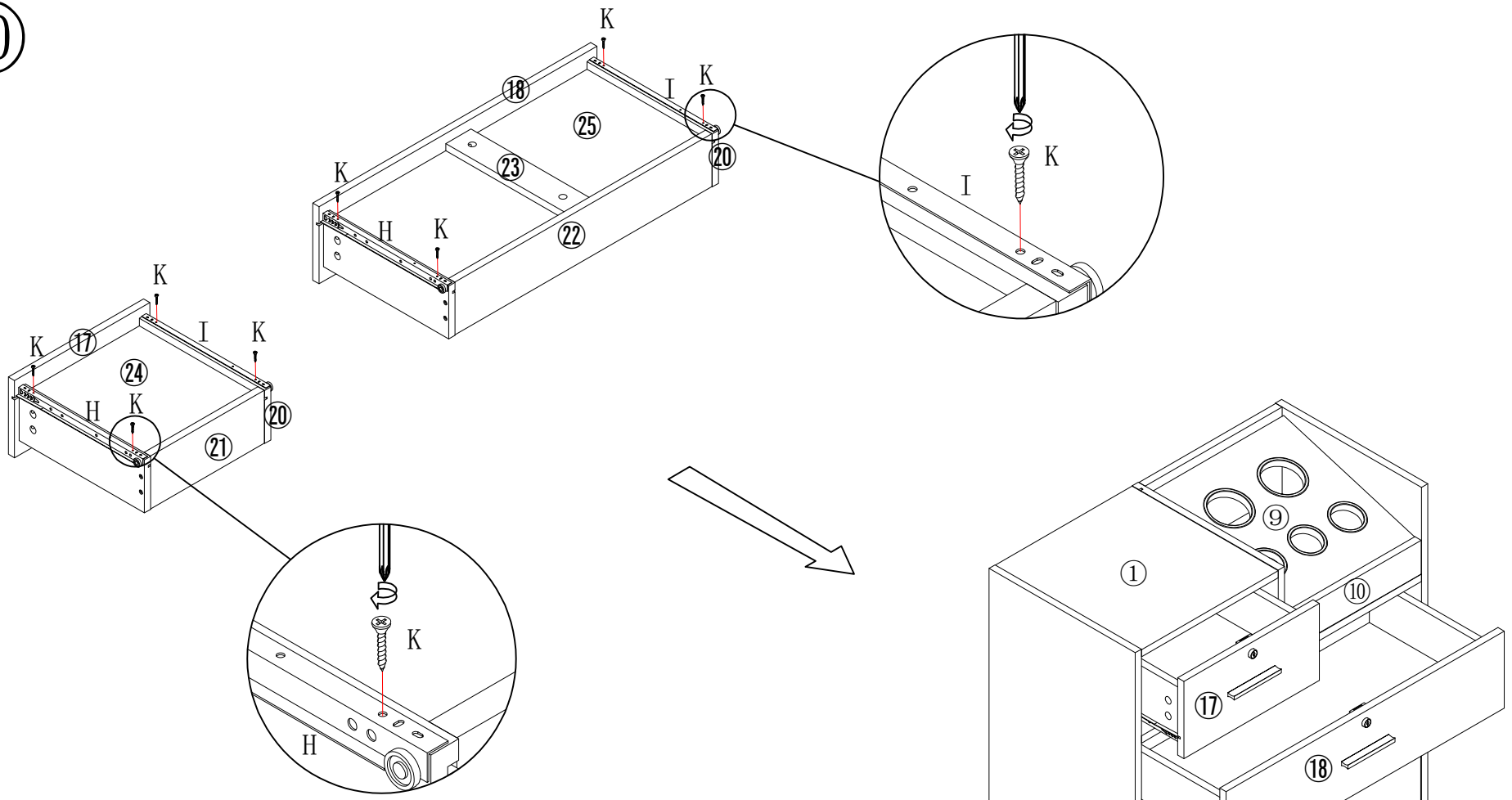

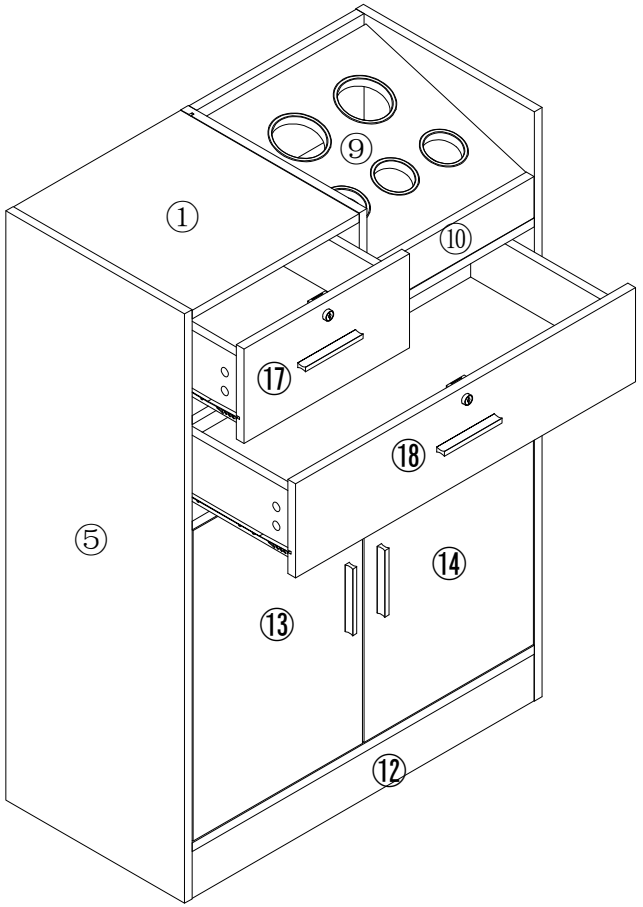

	H*2
	I*2
	K*8

⑪

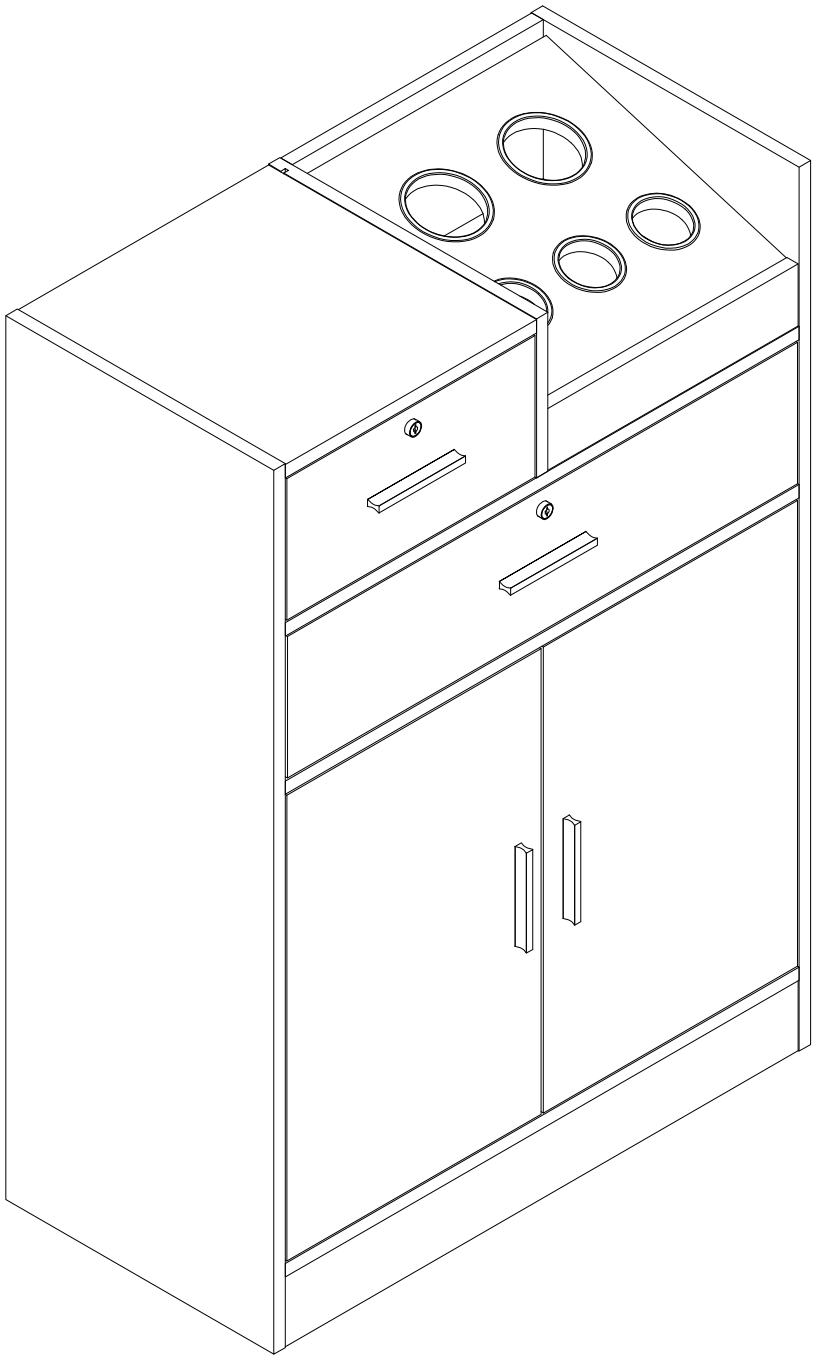

---END---