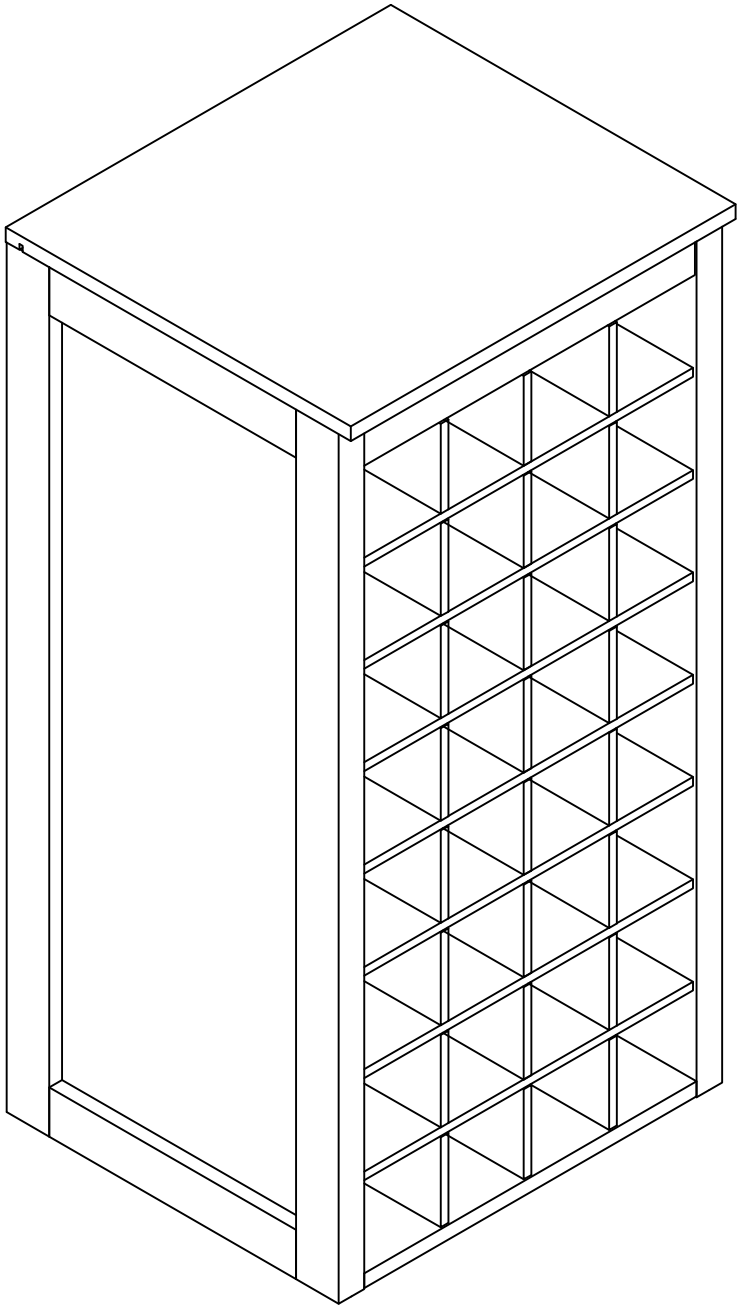

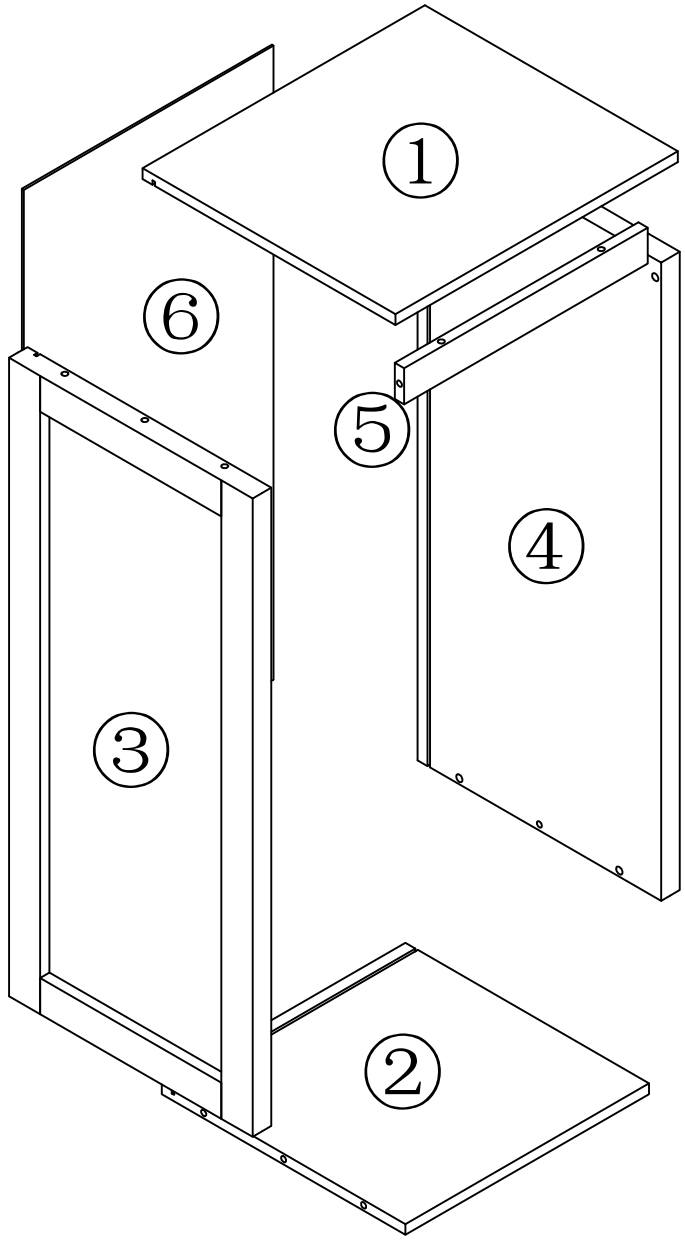

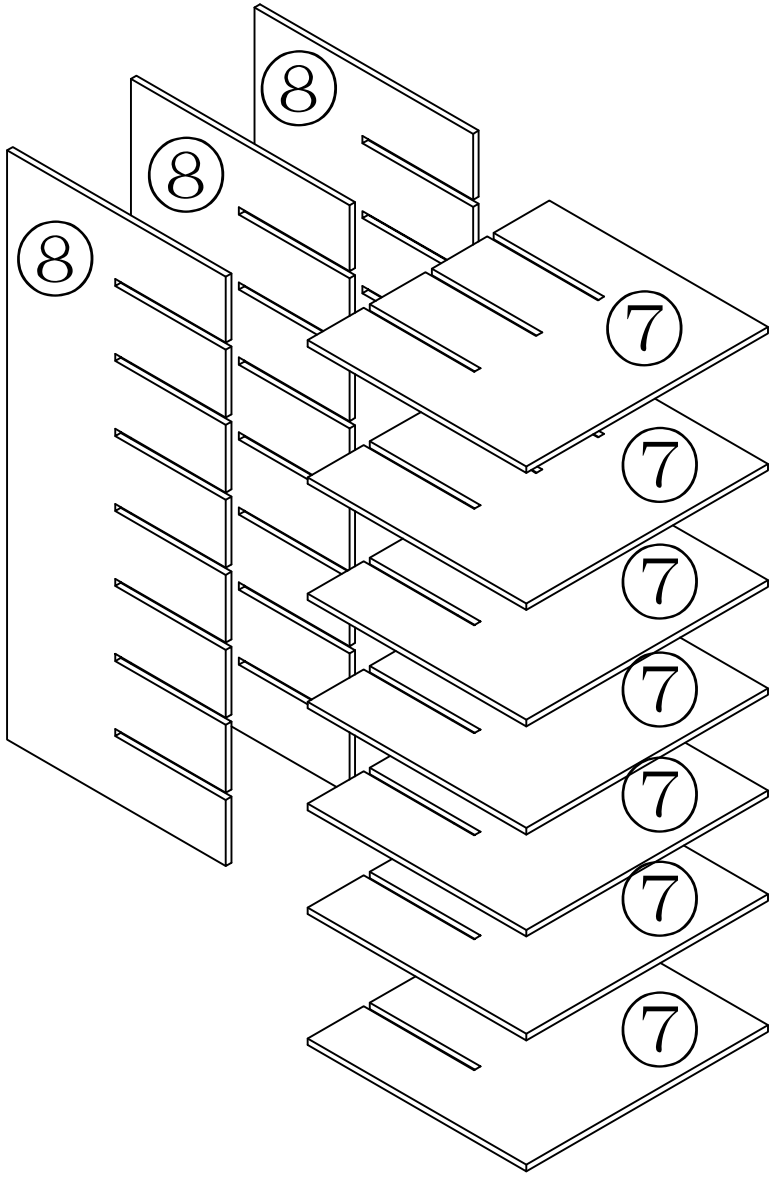

A	B	C 8*40	D 3*12	E	F
		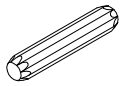			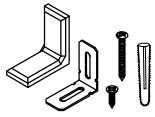
12PCS	12PCS	4PCS	4PCS	4PCS	2PCS

1

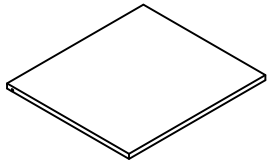

452*405 1PCS

2

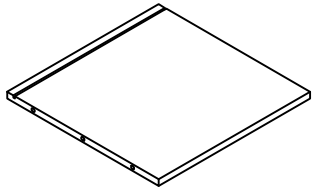

390*390 1PCS

3

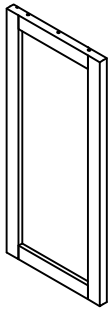

885*390 1PCS

4

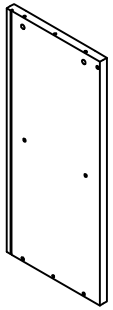

885*390 1PCS

5

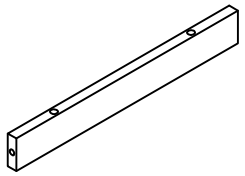

390*50 1PCS

6

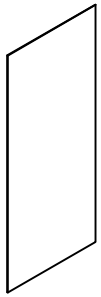

879*400 1PCS

7

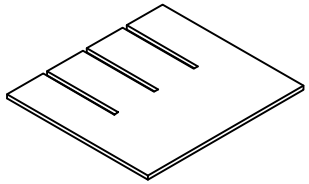

387*350 7PCS

8

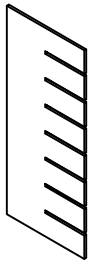

817*350 3PCS

Hardware installation demonstration

NOTE:Please make sure "A"hardware tightened and can't be pulled out!

I

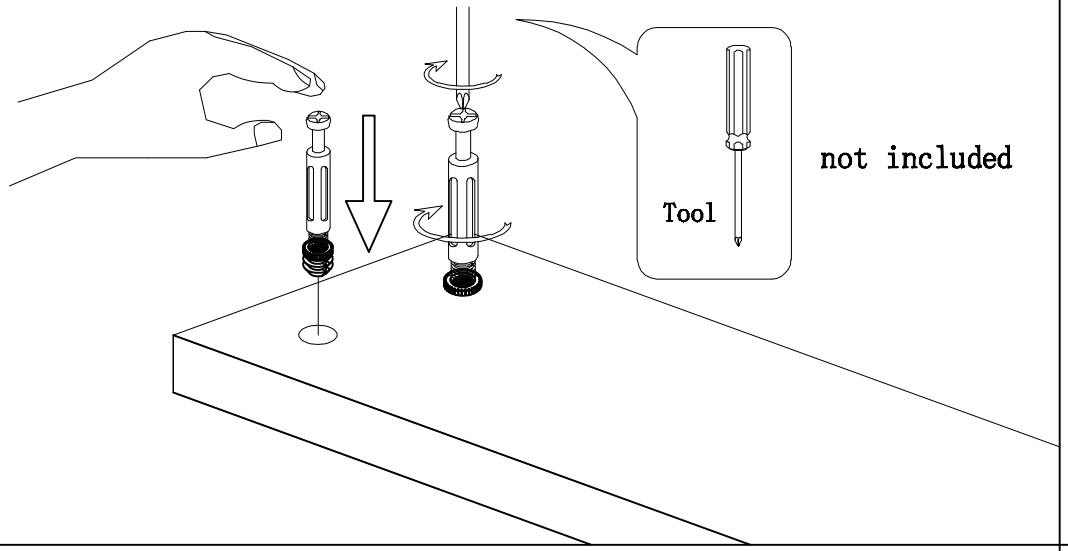

II

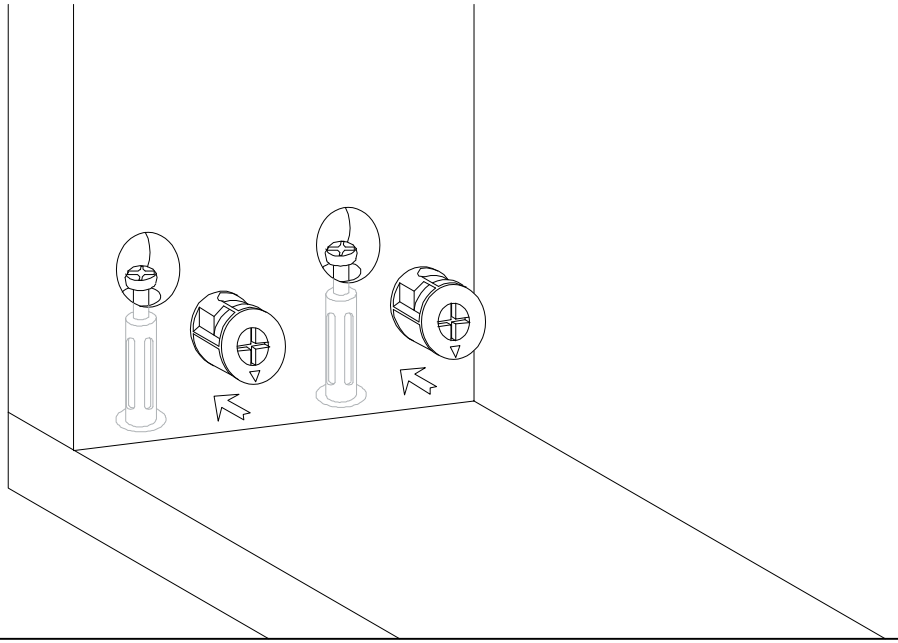

III

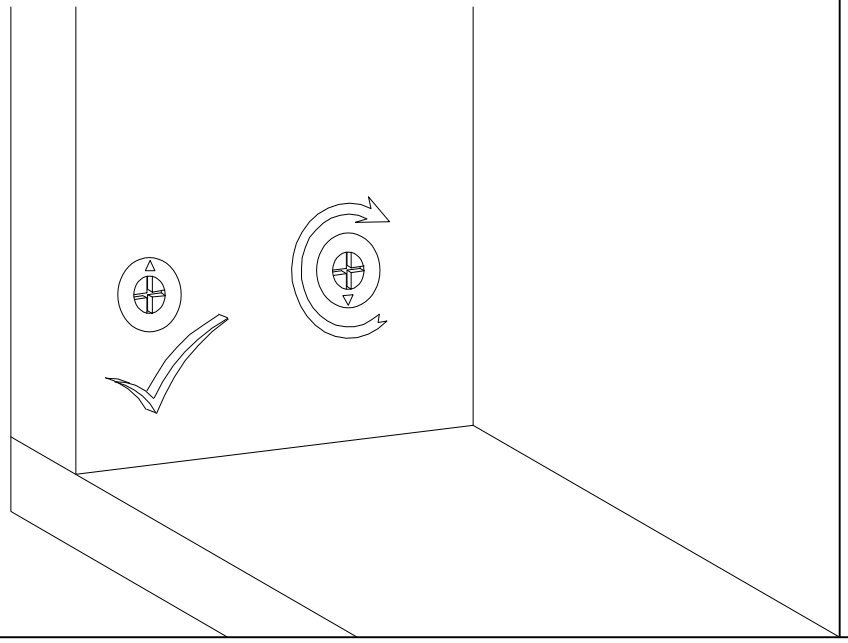

IV

Scan QR code for assembly video

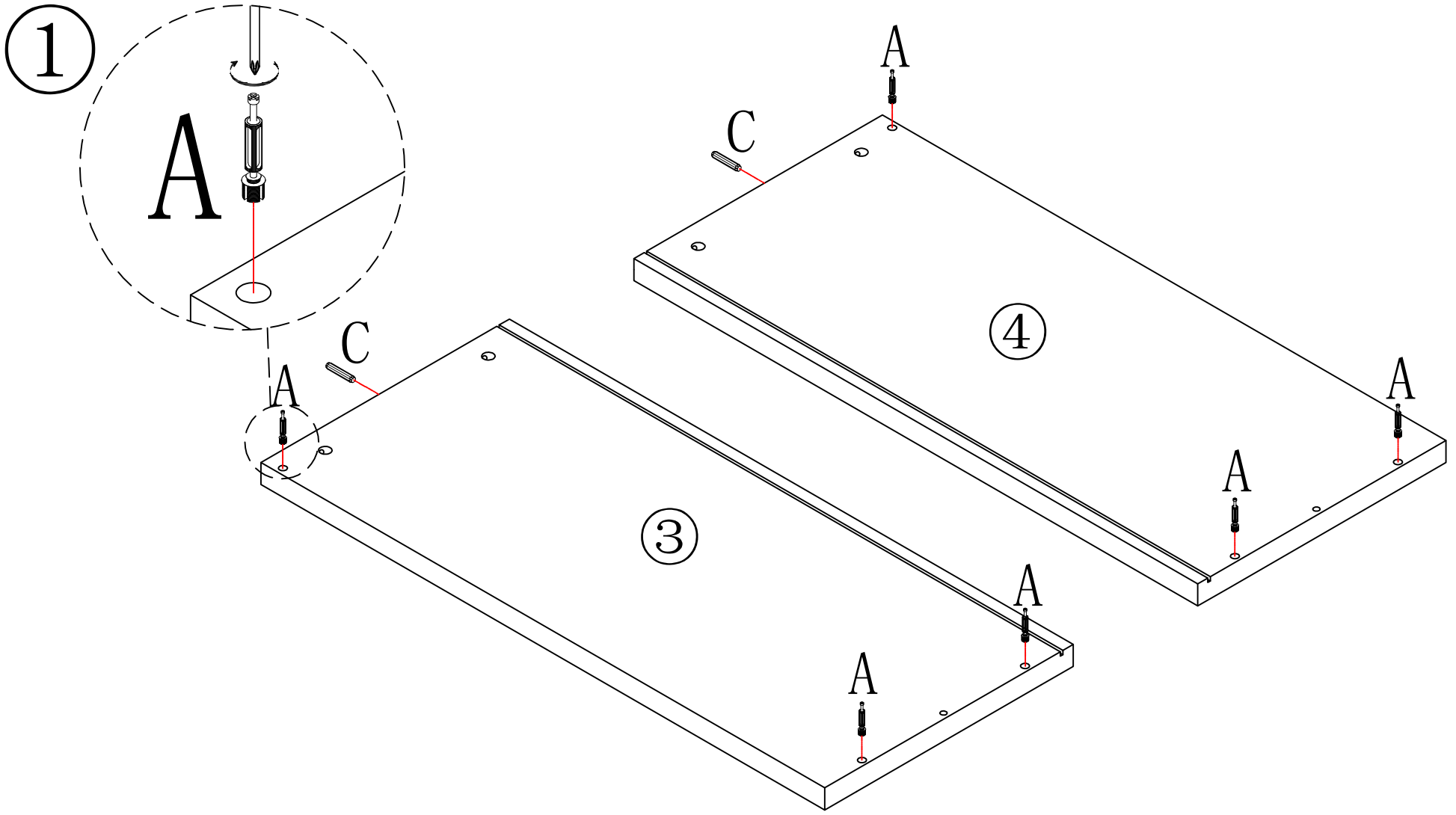

	A*6
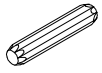	C*2

put A on board ③ ④

put C on board ③ ④

②

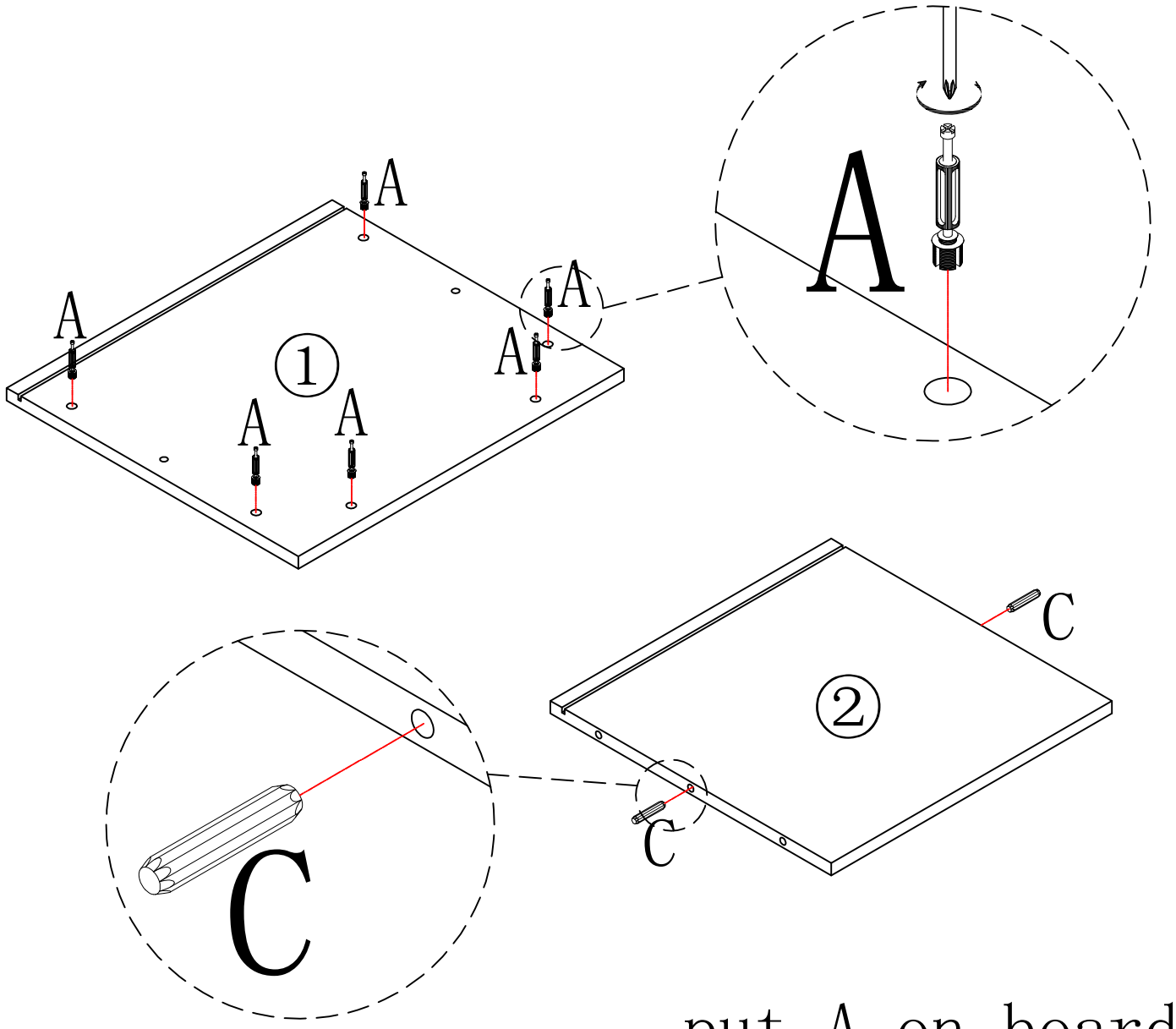

put A on board ①

put C on board ②

	A*6
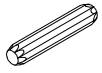	C*2

③

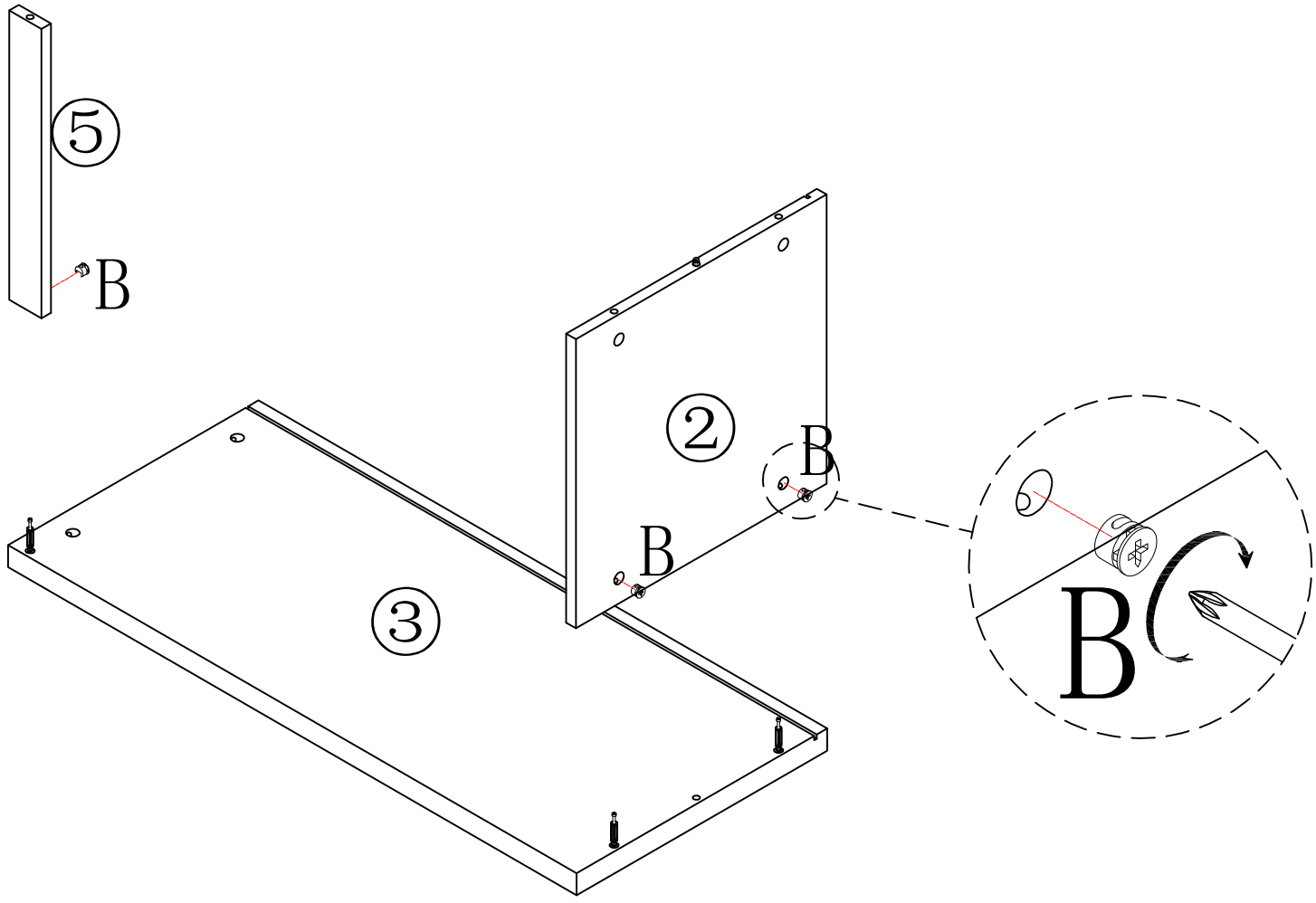

	B*3

put B on board ② ⑤

④

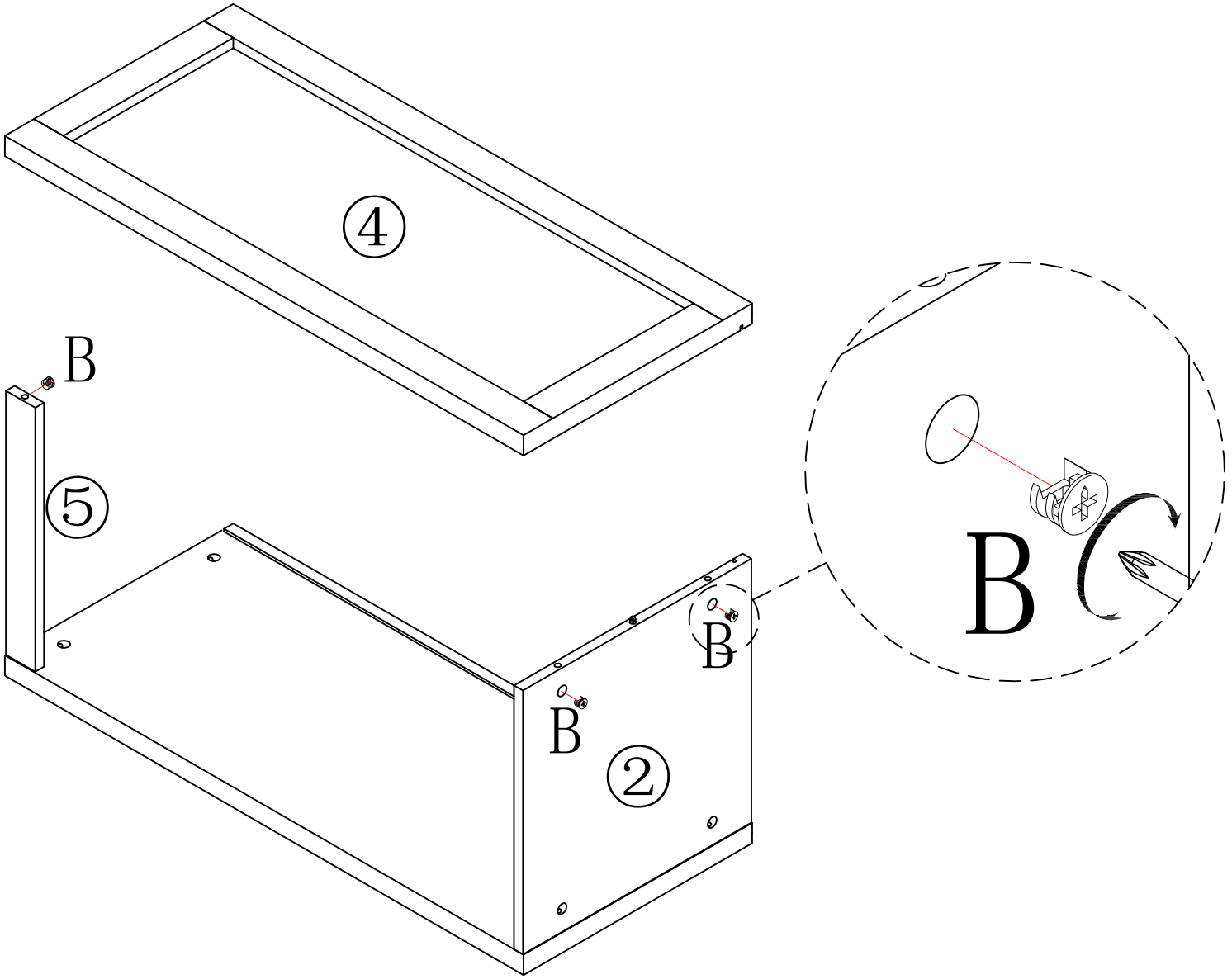

	B*3

put B on board ② ⑤

⑤

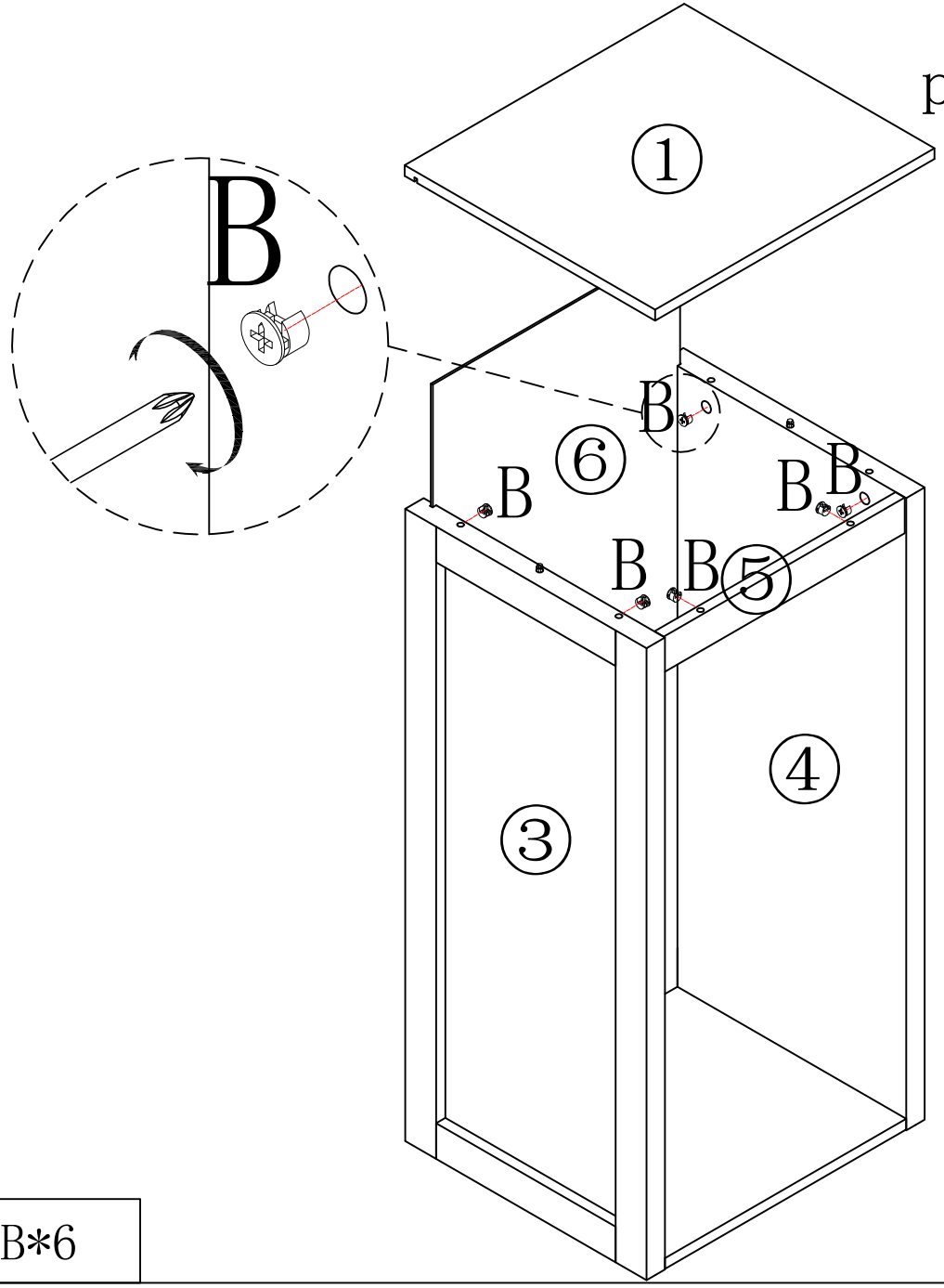

put B on board ③ ④ ⑤

	B*6

6

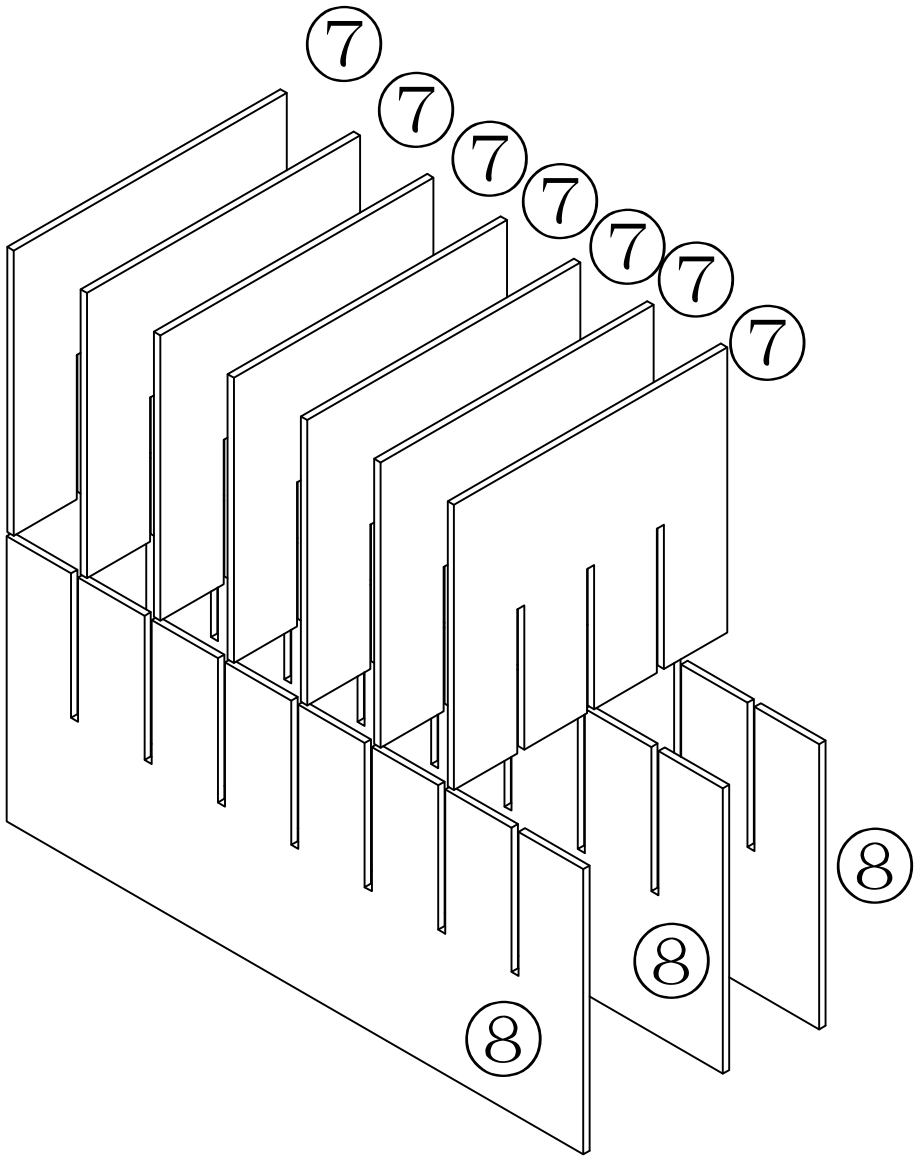

⑦

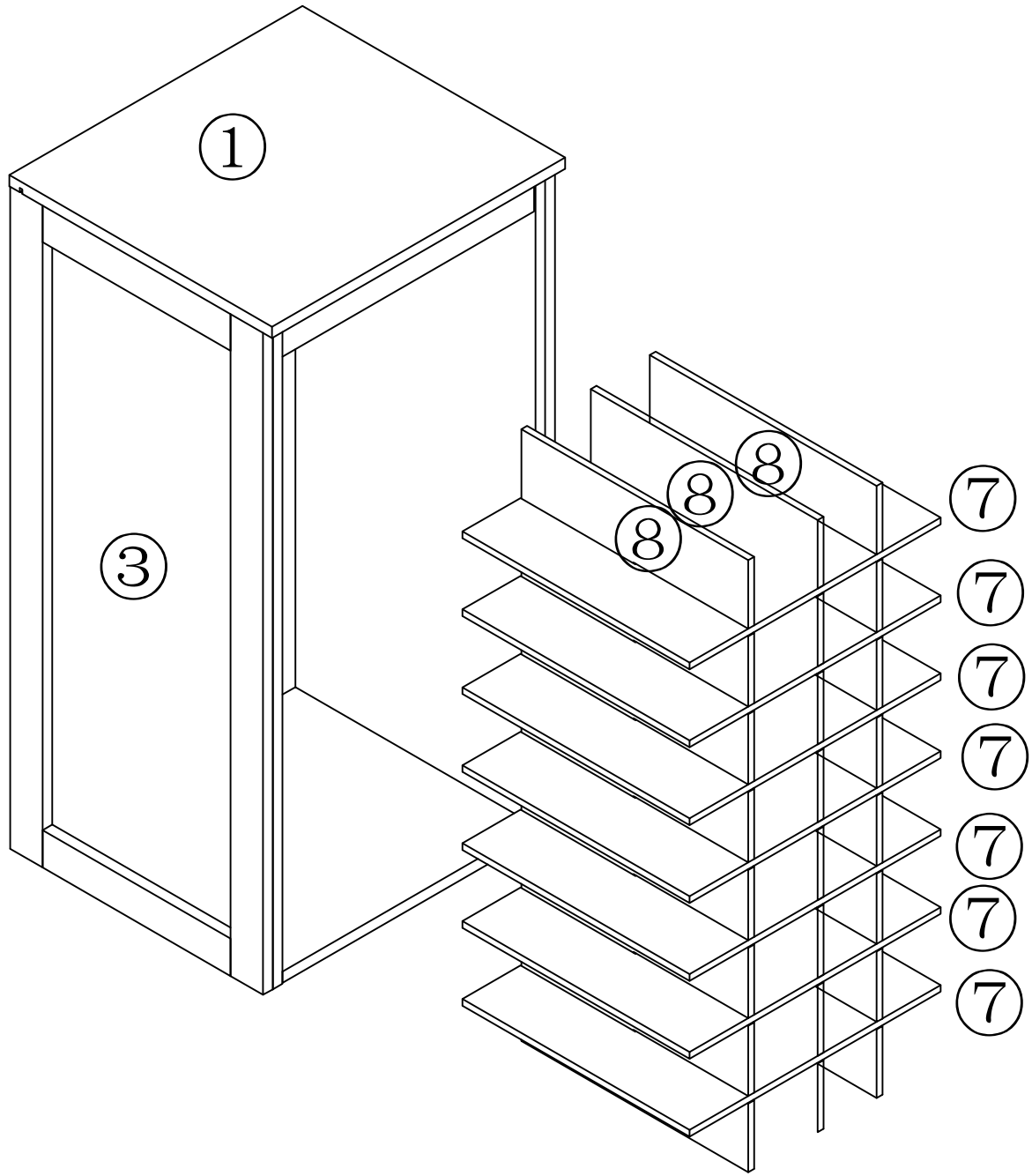

8

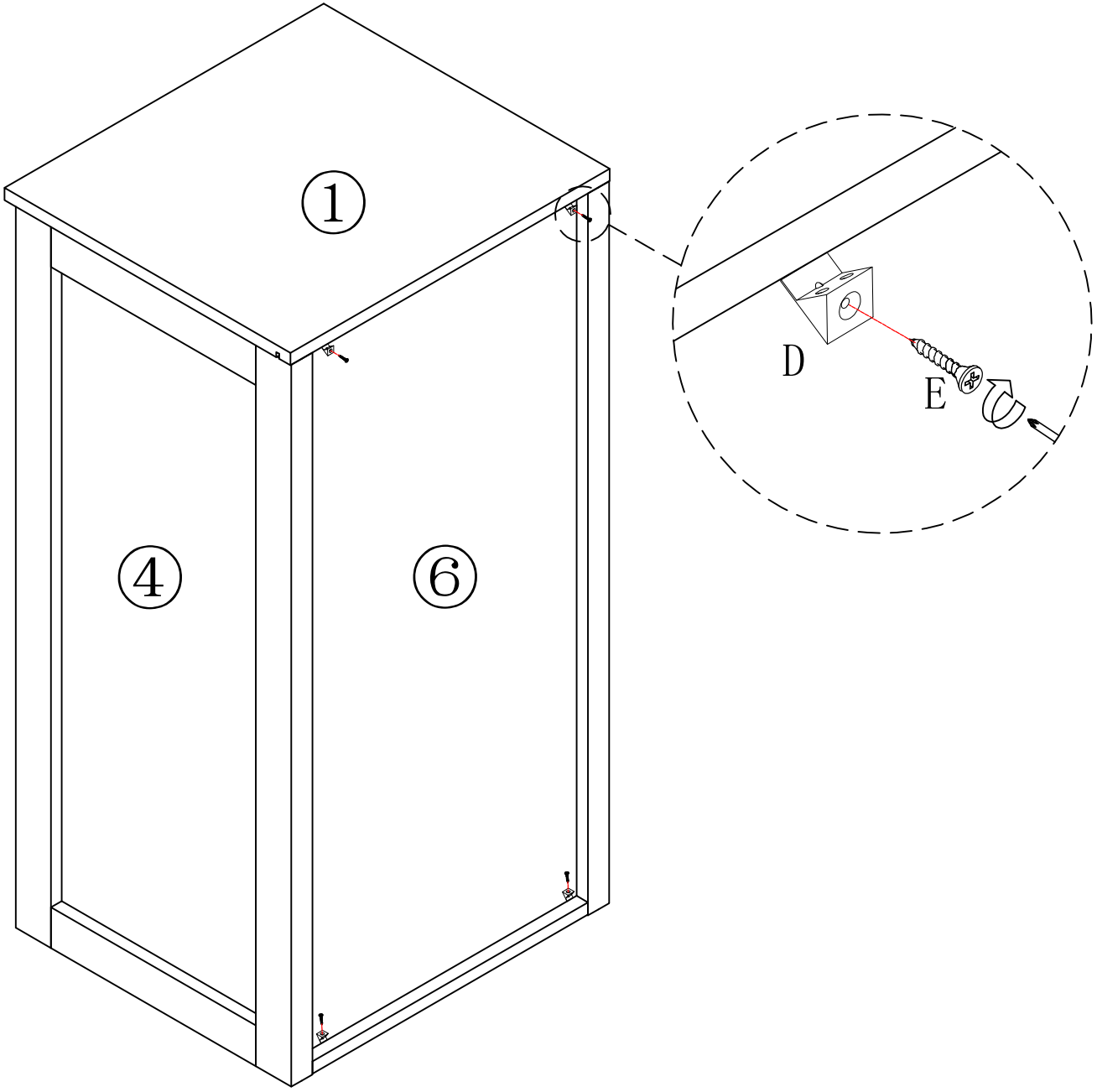

	D*4
	E*4

9

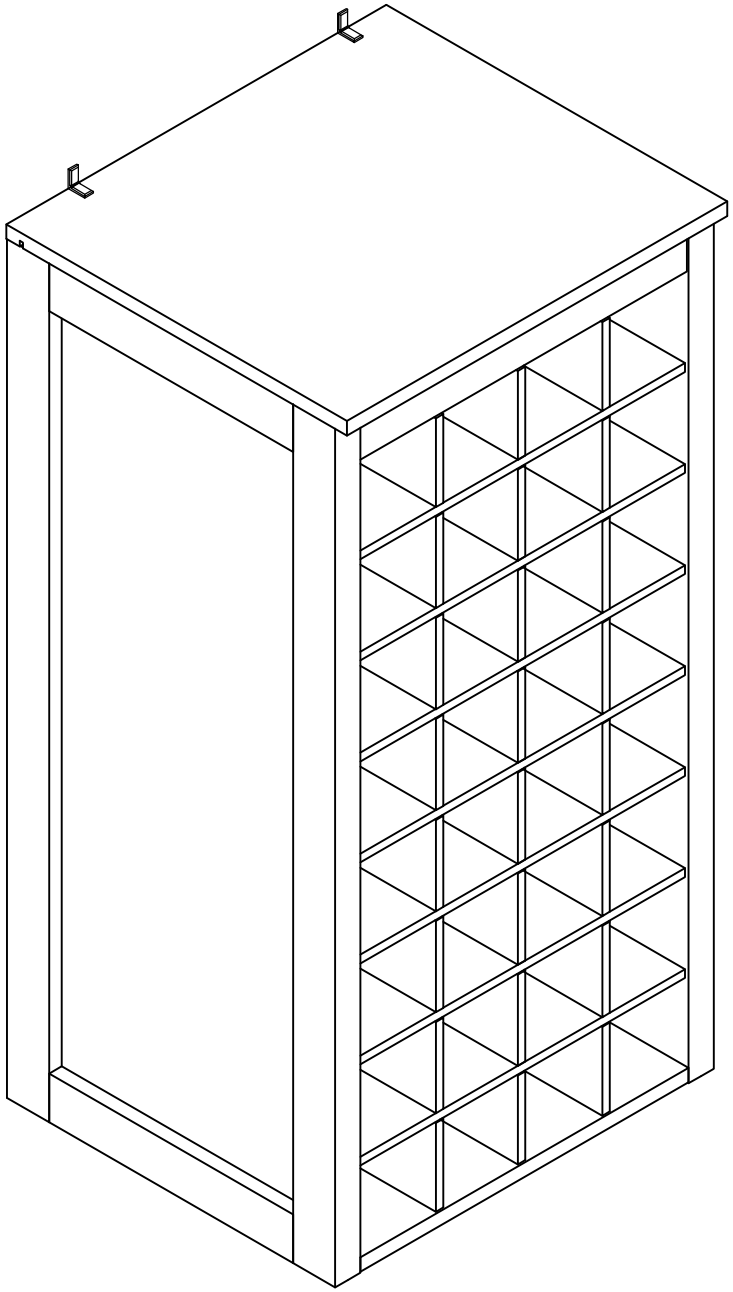

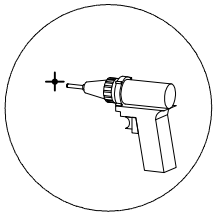

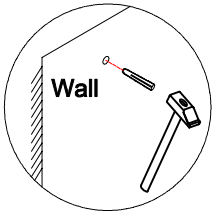

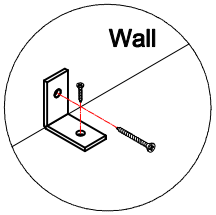

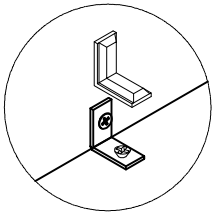

Please install tip-proof fitting.

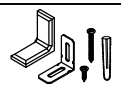	F*2

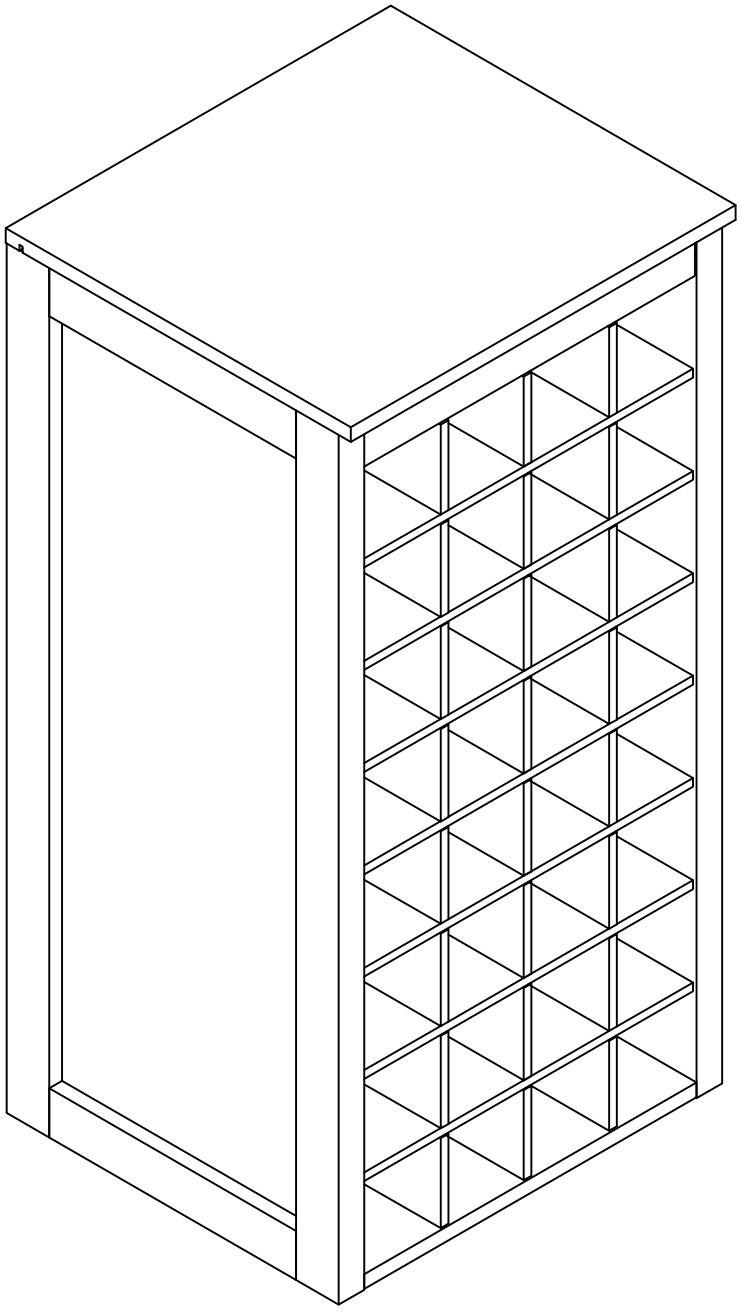

END